Chipsmall Limited consists of a professional team with an average of over 10 year of expertise in the distribution of electronic components. Based in Hongkong, we have already established firm and mutual-benefit business relationships with customers from,Europe,America and south Asia,supplying obsolete and hard-to-find components to meet their specific needs.

With the principle of “Quality Parts,Customers Priority,Honest Operation,and Considerate Service”,our business mainly focus on the distribution of electronic components. Line cards we deal with include Microchip,ALPS,ROHM,Xilinx,Pulse,ON,Everlight and Freescale. Main products comprise IC,Modules,Potentiometer,IC Socket,Relay,Connector.Our parts cover such applications as commercial,industrial, and automotives areas.

We are looking forward to setting up business relationship with you and hope to provide you with the best service and solution. Let us make a better world for our industry!

Contact us

Tel: +86-755-8981 8866 Fax: +86-755-8427 6832
Email & Skype: info@chipsmall.com Web: www.chipsmall.com
Address: A1208, Overseas Decoration Building, #122 Zhenhua RD., Futian, Shenzhen, China

Alle Rechte vorbehalten/ *All rights reserved*

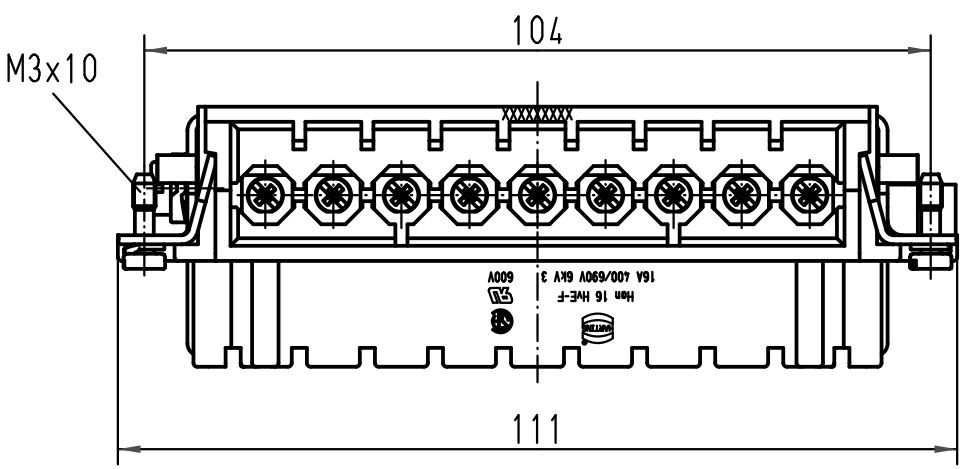

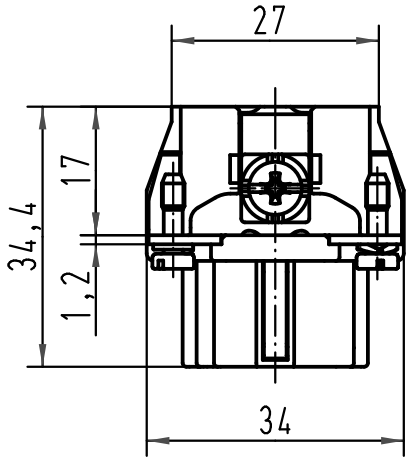

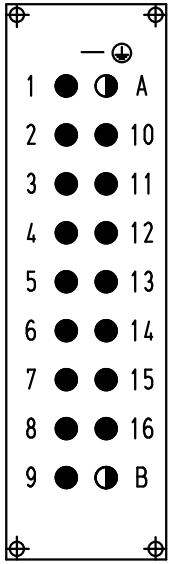

Kontaktanordnung (Ansicht Anschlussseite)

contact arrangement (view from terminal side)

● Arbeitskontakte
working contacts

◑ Schaltkontakte
relay contacts

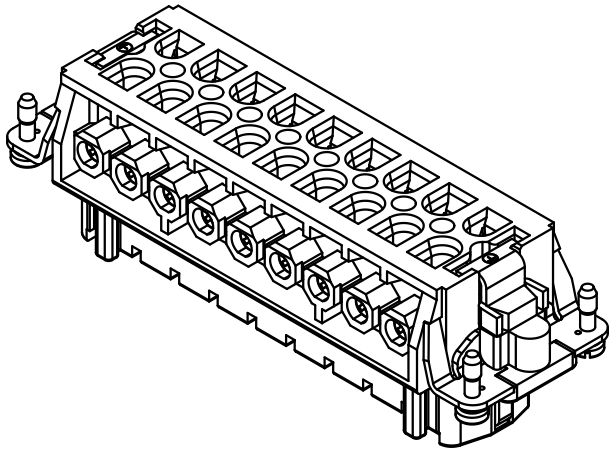

All Dimensions in mm
Original Size DIN A 4

Techn. Character.

Nicht tolerierte Maße/ *Free size tolerances*

	Dat.	Name	Maßstab/ *Scale*
Detail.	05.01.05	DY	1:1
Insp.		SR	
Stand.			

Mod.	Dat.	Name
414187	25.09.08	Rull
410278		

HARTING Electric GmbH & Co. KG
D-32339 Espelkamp

Han 16HvE-F-s

Buchseneinsatz/
female insert

TB 09 34 016 2701

Sub. TB 09 34 0.. 2701 v. 01.03.93

Blatt/ *page* /