Chipsmall Limited consists of a professional team with an average of over 10 year of expertise in the distribution of electronic components. Based in Hongkong, we have already established firm and mutual-benefit business relationships with customers from,Europe,America and south Asia,supplying obsolete and hard-to-find components to meet their specific needs.

With the principle of “Quality Parts,Customers Priority,Honest Operation,and Considerate Service”,our business mainly focus on the distribution of electronic components. Line cards we deal with include Microchip,ALPS,ROHM,Xilinx,Pulse,ON,Everlight and Freescale. Main products comprise IC,Modules,Potentiometer,IC Socket,Relay,Connector.Our parts cover such applications as commercial,industrial, and automotives areas.

We are looking forward to setting up business relationship with you and hope to provide you with the best service and solution. Let us make a better world for our industry!

Contact us

Tel: +86-755-8981 8866 Fax: +86-755-8427 6832
Email & Skype: info@chipsmall.com Web: www.chipsmall.com
Address: A1208, Overseas Decoration Building, #122 Zhenhua RD., Futian, Shenzhen, China

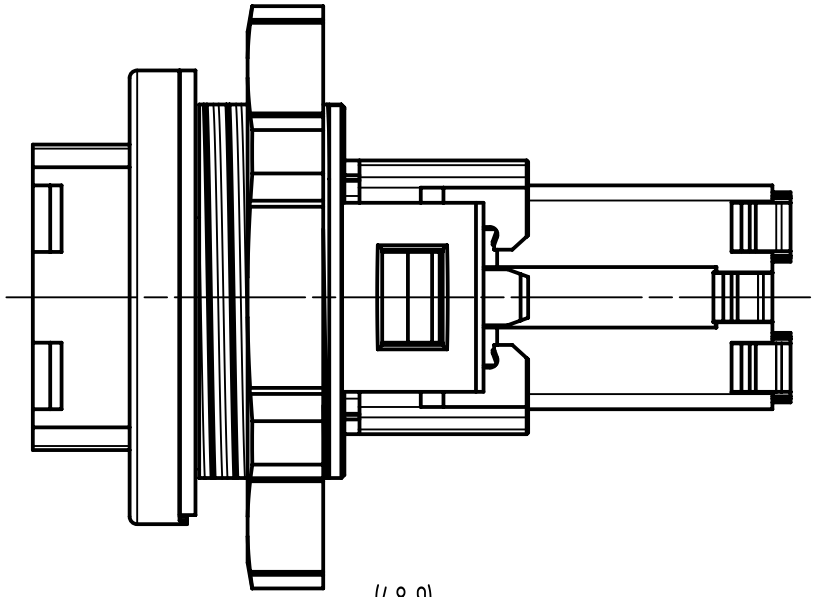

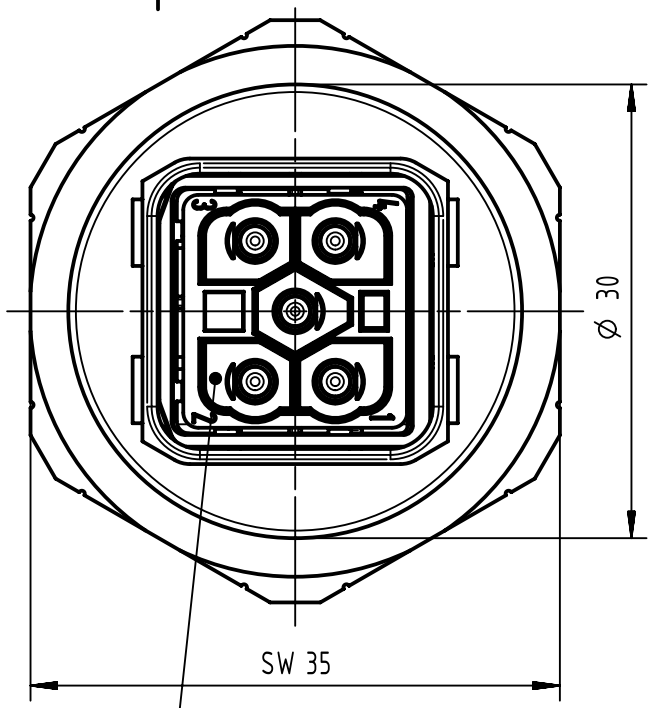

(1:1)

Montageausschnitt
panel cut out

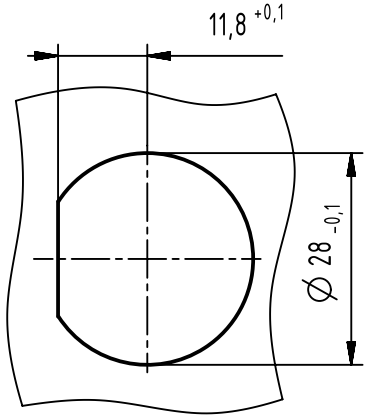

Wandstärke: 1mm bis 6mm
thickness panel: 1mm to 6mm
Anzugsmoment: 2,5Nm bis 3Nm
nut screwing torque: 2.5Nm to 3Nm

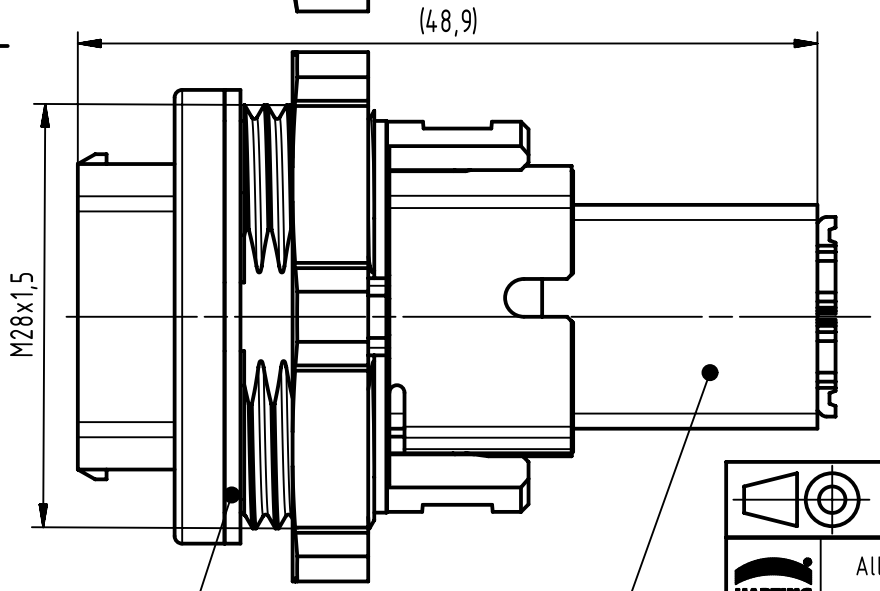

Steckgesicht nach
IEC 61076-03-118
mating face acc. to
IEC 61076-3-118

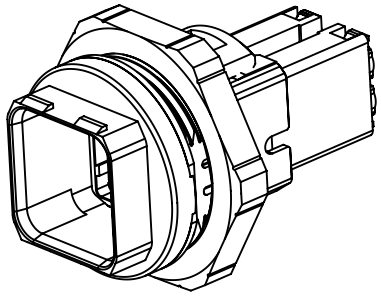

Querschnitt / *cross section*: 0,5mm²-2,5mm²

Dichtung
seal

Stiftträger
male insert QL

All Dimensions in mm Original Size DIN A4	Scale 2:1	Free size tol.		Ref. Sub. TB 09352320312 500000058722 2013-02-06	
All rights reserved Department EC PD - DE	Created by ELLERMANN	Inspected by DAHMS	Standardisation HOFFMANN	Date 2013-06-12	State Final Release
HARTING Electronics GmbH D-32339 Espelkamp	Title Han PP Power PFT metal QL AWG20-14				Doc-Key / ECM-Nr. 100221211/UGD/003/C 500000062511
	Type TB	Number 09352320312		Rev. C	Page 1/1

A4