Chipsmall Limited consists of a professional team with an average of over 10 year of expertise in the distribution of electronic components. Based in Hongkong, we have already established firm and mutual-benefit business relationships with customers from,Europe,America and south Asia,supplying obsolete and hard-to-find components to meet their specific needs.

With the principle of “Quality Parts,Customers Priority,Honest Operation,and Considerate Service”,our business mainly focus on the distribution of electronic components. Line cards we deal with include Microchip,ALPS,ROHM,Xilinx,Pulse,ON,Everlight and Freescale. Main products comprise IC,Modules,Potentiometer,IC Socket,Relay,Connector.Our parts cover such applications as commercial,industrial, and automotives areas.

We are looking forward to setting up business relationship with you and hope to provide you with the best service and solution. Let us make a better world for our industry!

Contact us

Tel: +86-755-8981 8866 Fax: +86-755-8427 6832
Email & Skype: info@chipsmall.com Web: www.chipsmall.com
Address: A1208, Overseas Decoration Building, #122 Zhenhua RD., Futian, Shenzhen, China

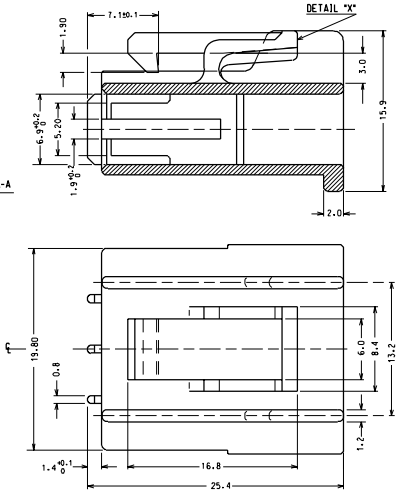

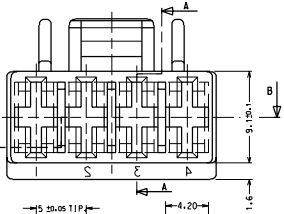

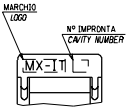

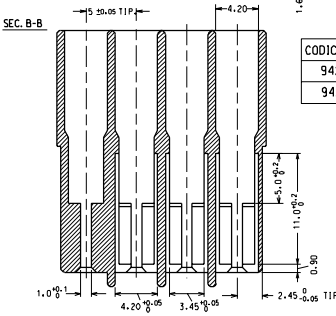

CODICE ART./P/N	COLORE/COLOR
94213-9004	BIANCO/WHITE
94213-9014	NERO/BLACK

MATERIALE: NYLON 6.6 V2

MATERIAL: NYLON 6.6 V2

CONFEZIONE: BOX DA 5000 pz.

PACKAGING: CARDBOARD BOXES 5000 pcs/ea

SPQ= 5000 pz.

Descr. Std.: FEMM HOUSING W/LATCH 4 CKT

DIMENSIONS: ☐ mm INCH ☐ INCH mm ☒ mm ONLY

SHT | REV: REVISE ON CAD ONLY

FIRST ANGLE PROJECTION

EC NO. Z2001-0099
DRAWN: F. Gottardo 07-03-01
CHK'D: M. Ferrero 07-03-01
APPR'D: J. Lum 07-03-01

QUALITY SYMBOLS — DESCRIPTION — REV
MAJOR — CRITICAL

GENERAL TOLERANCES: (UNLESS SPECIFIED)

	mm	INCH
4 PLACES	±0.	±.
3 PLACES	±0.15	±.
2 PLACES	±0.	±.
1 PLACE	±0.25	±.
ANGULAR	± 2°	

SCALE 4:1 — DESIGN UNITS ☒ mm ☐ INCH

DRAWN BY & DATE: F. Gottardo 05-10-92
CHECKED BY & DATE: M. Prato 05-10-92
APPROVED BY & DATE: Vedi Tabella
CAD FILENAME: SDE 7006

TITLE: HOUSING A 4 VIE PER FEMMINA HNF (CAIMANO) 4 CKT HOUSING FOR HNF (CAIMAN) TERMINAL

MOLEX INCORPORATED

MATERIAL NO.

DRAWING NO. SD-94213-004 — SHEET NO. 1/1

A2

DRAFT WHERE APPLICABLE MUST REMAIN WITHIN DIMENSIONS

THIS DRAWING CONTAINS INFORMATION THAT IS PROPRIETARY TO MOLEX INCORPORATED AND SHOULD NOT BE USED WITHOUT WRITTEN PERMISSION.

SIZE A3