Chipsmall Limited consists of a professional team with an average of over 10 year of expertise in the distribution of electronic components. Based in Hongkong, we have already established firm and mutual-benefit business relationships with customers from,Europe,America and south Asia,supplying obsolete and hard-to-find components to meet their specific needs.

With the principle of “Quality Parts,Customers Priority,Honest Operation,and Considerate Service”,our business mainly focus on the distribution of electronic components. Line cards we deal with include Microchip,ALPS,ROHM,Xilinx,Pulse,ON,Everlight and Freescale. Main products comprise IC,Modules,Potentiometer,IC Socket,Relay,Connector.Our parts cover such applications as commercial,industrial, and automotives areas.

We are looking forward to setting up business relationship with you and hope to provide you with the best service and solution. Let us make a better world for our industry!

Contact us

Tel: +86-755-8981 8866 Fax: +86-755-8427 6832
Email & Skype: info@chipsmall.com Web: www.chipsmall.com
Address: A1208, Overseas Decoration Building, #122 Zhenhua RD., Futian, Shenzhen, China

Alle Rechte vorbehalten/ *All rights reserved*

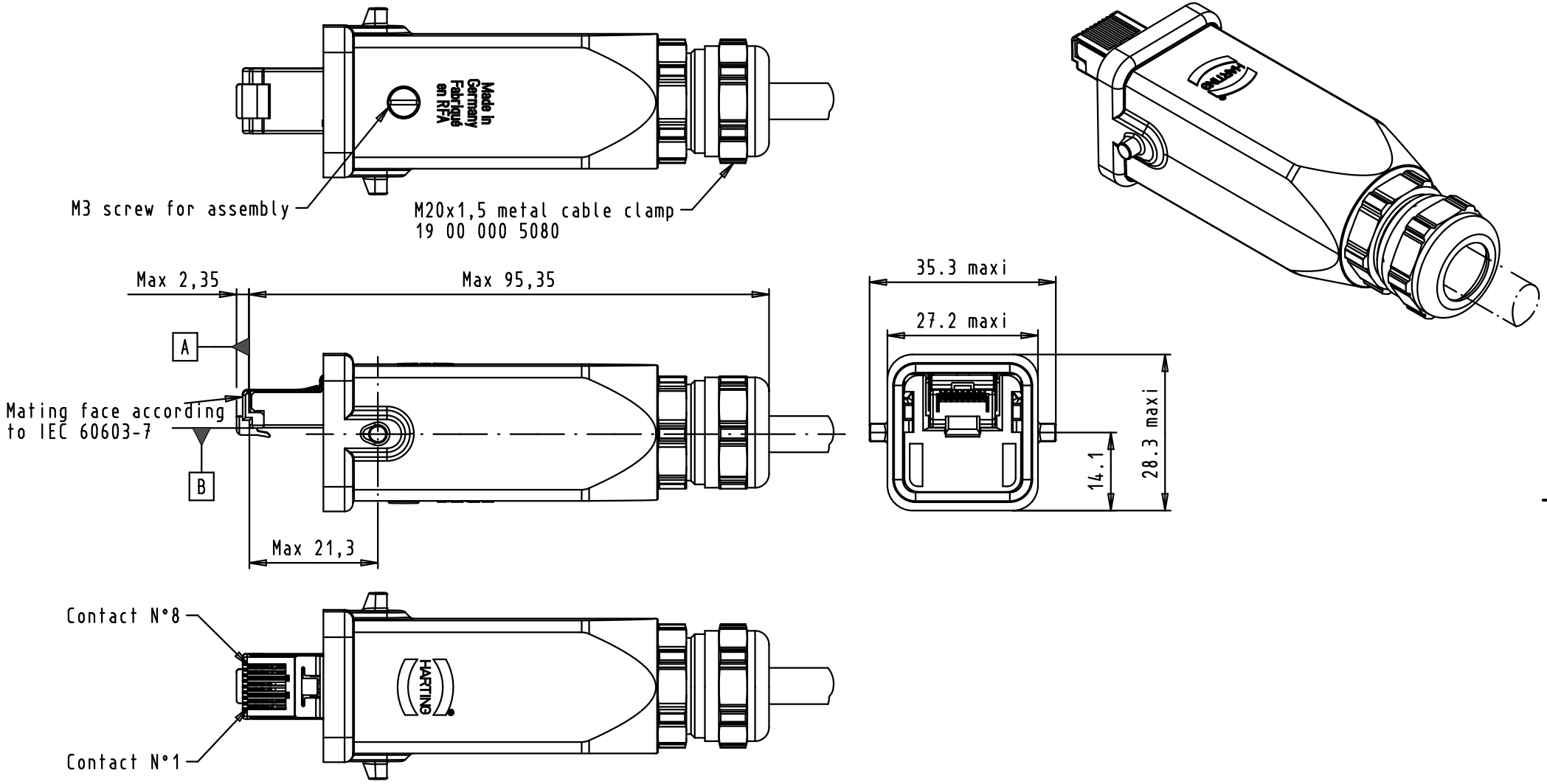

Cables outer diameter 6.5 up to 9.5 mm
Stranded wire AWG 28/7-24/7

Part number	Color wire manager	Mod.	Dat.	Name
09 45 115 1512	Blue	EC01089	06/01/10	AB
09 45 115 1502	White	31869	17/02/04	AF
		36301	16-05-11	SD

	Dat.	Name
Detail.	17/02/04	AF
Insp.	16-05-11	JMDV
Stand.		

All Dim. in mm
Orig. Size DIN A 4

HARTING EURL
F-95972 Paris

RJ-Industrial
IP67 data plug metal version M HAN 3A shielded with 8 data contacts

TB 09 45 115 15X2

Sub.

Maßstab/ *Scale* 1:1

Blatt/ *Page* 1/1