Chipsmall Limited consists of a professional team with an average of over 10 year of expertise in the distribution of electronic components. Based in Hongkong, we have already established firm and mutual-benefit business relationships with customers from,Europe,America and south Asia,supplying obsolete and hard-to-find components to meet their specific needs.

With the principle of “Quality Parts,Customers Priority,Honest Operation,and Considerate Service”,our business mainly focus on the distribution of electronic components. Line cards we deal with include Microchip,ALPS,ROHM,Xilinx,Pulse,ON,Everlight and Freescale. Main products comprise IC,Modules,Potentiometer,IC Socket,Relay,Connector.Our parts cover such applications as commercial,industrial, and automotives areas.

We are looking forward to setting up business relationship with you and hope to provide you with the best service and solution. Let us make a better world for our industry!

Contact us

Tel: +86-755-8981 8866 Fax: +86-755-8427 6832
Email & Skype: info@chipsmall.com Web: www.chipsmall.com
Address: A1208, Overseas Decoration Building, #122 Zhenhua RD., Futian, Shenzhen, China

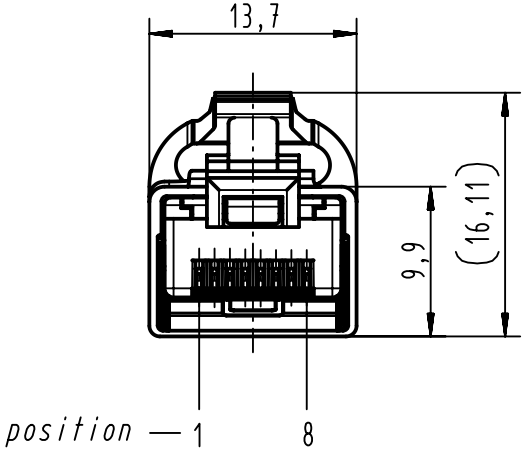

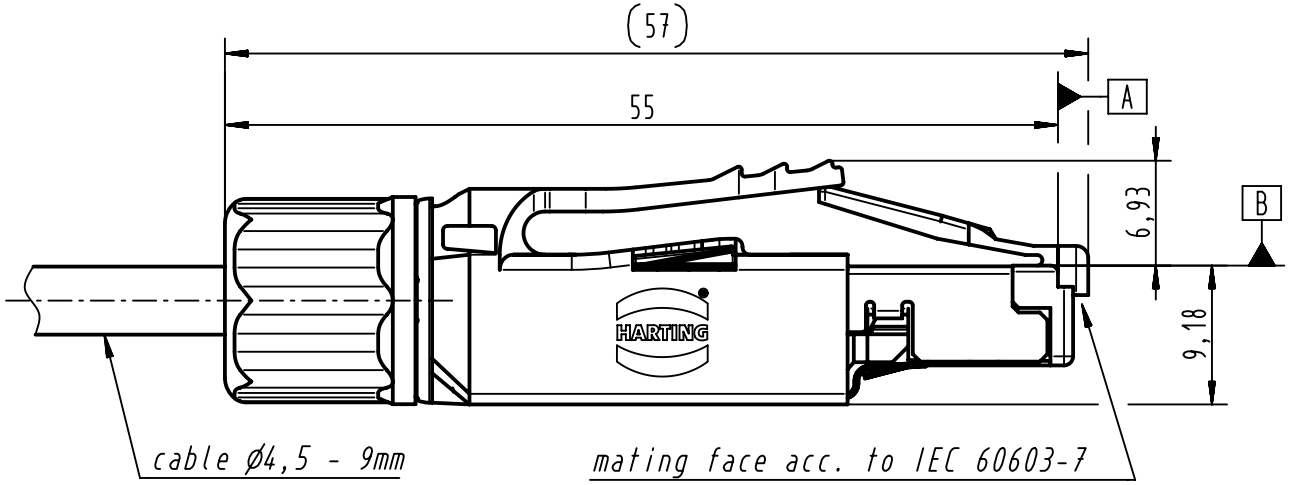

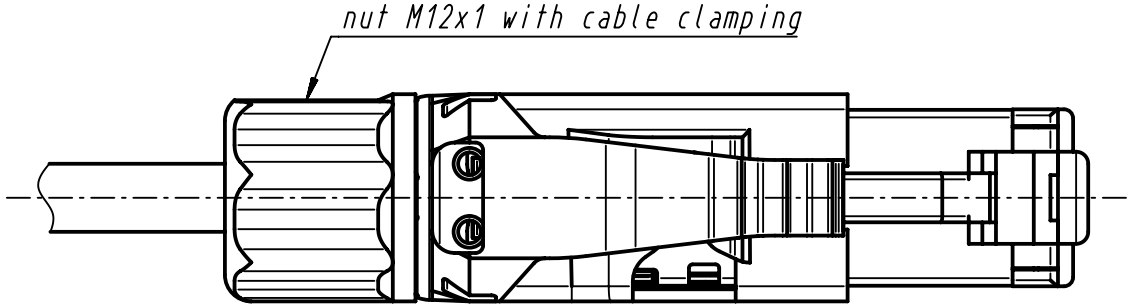

on request: Colour-Clip with RFID slot
TB 09 45 850 00xx

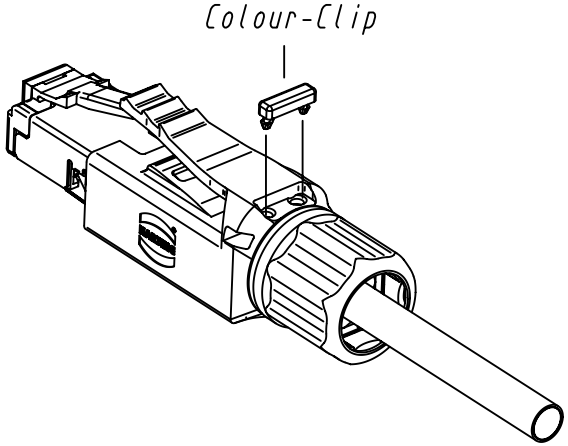

data contact plating: Au 1,27µm (50µin) over nickel

All Dimensions in mm Original Size DIN A4	Scale 2:1	Free size tol.	Ref. Sub. TB 09 45 151 1560 28.03.11 Mod.: 36374	
All rights reserved Department EC PD - DE	Created by HASSE	Inspected by LINDKAMP	Standardisation HOFFMANN	Date 2013-01-07	State Final Release
HARTING Electronics GmbH D-32339 Espelkamp	Title HARTING RJ Industrial 10G Plug,straight			Doc-Key / ECM-Nr. 100214314/UGD/020/A 500000057802
	Type TB	Number 09451511560	Rev. A	Page 1/1

A4