Chipsmall Limited consists of a professional team with an average of over 10 year of expertise in the distribution of electronic components. Based in Hongkong, we have already established firm and mutual-benefit business relationships with customers from,Europe,America and south Asia,supplying obsolete and hard-to-find components to meet their specific needs.

With the principle of “Quality Parts,Customers Priority,Honest Operation,and Considerate Service”,our business mainly focus on the distribution of electronic components. Line cards we deal with include Microchip,ALPS,ROHM,Xilinx,Pulse,ON,Everlight and Freescale. Main products comprise IC,Modules,Potentiometer,IC Socket,Relay,Connector.Our parts cover such applications as commercial,industrial, and automotives areas.

We are looking forward to setting up business relationship with you and hope to provide you with the best service and solution. Let us make a better world for our industry!

Contact us

Tel: +86-755-8981 8866 Fax: +86-755-8427 6832
Email & Skype: info@chipsmall.com Web: www.chipsmall.com
Address: A1208, Overseas Decoration Building, #122 Zhenhua RD., Futian, Shenzhen, China

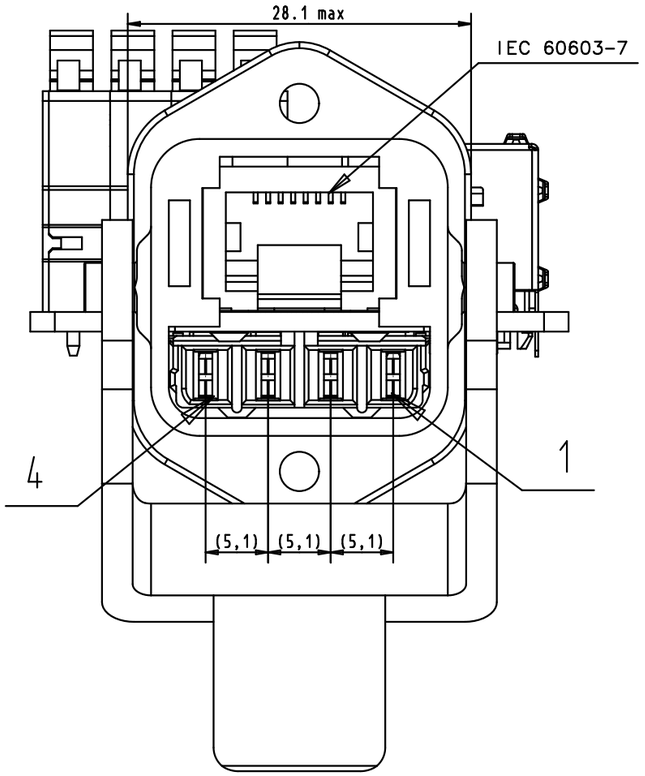

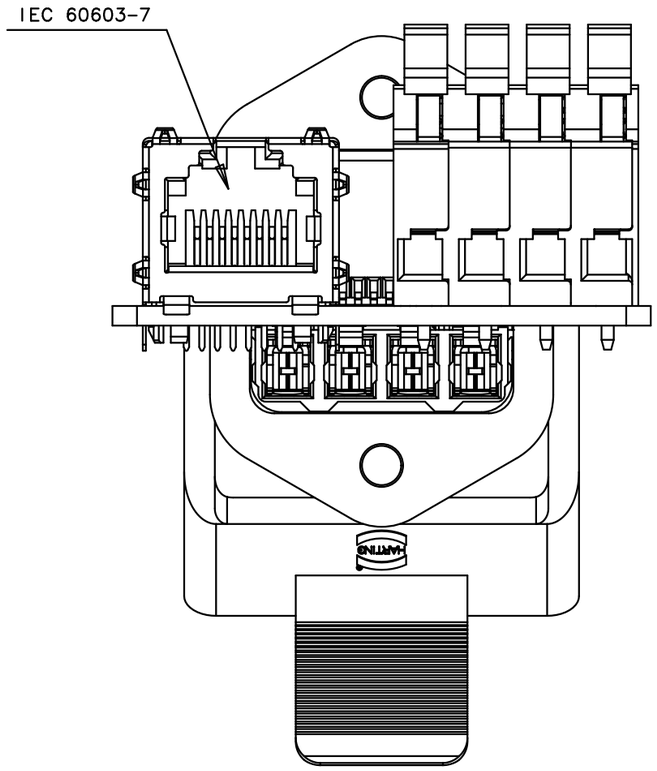

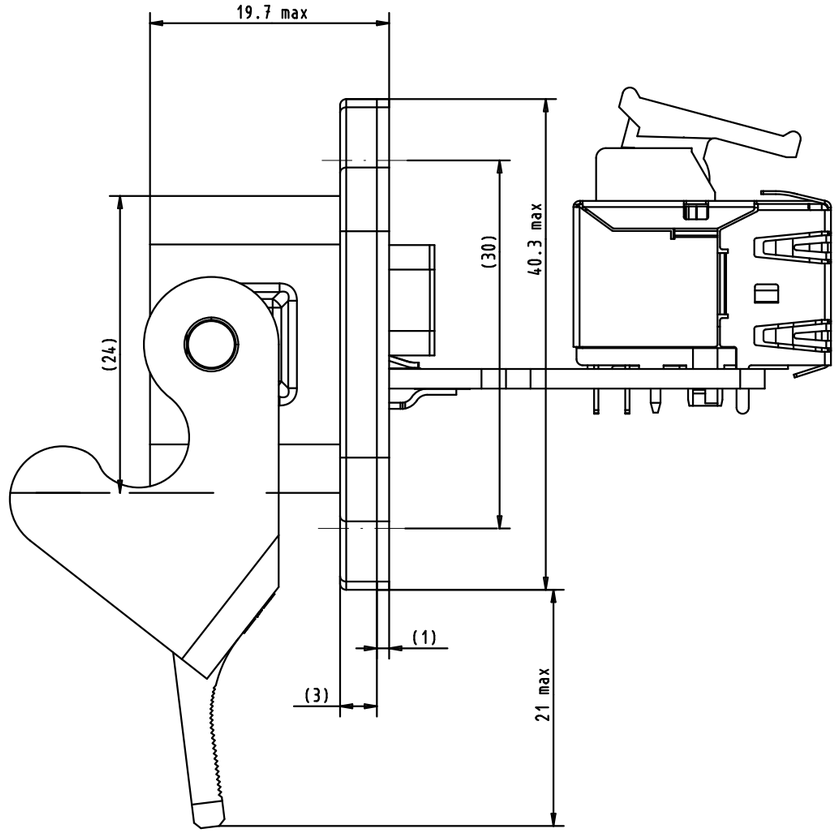

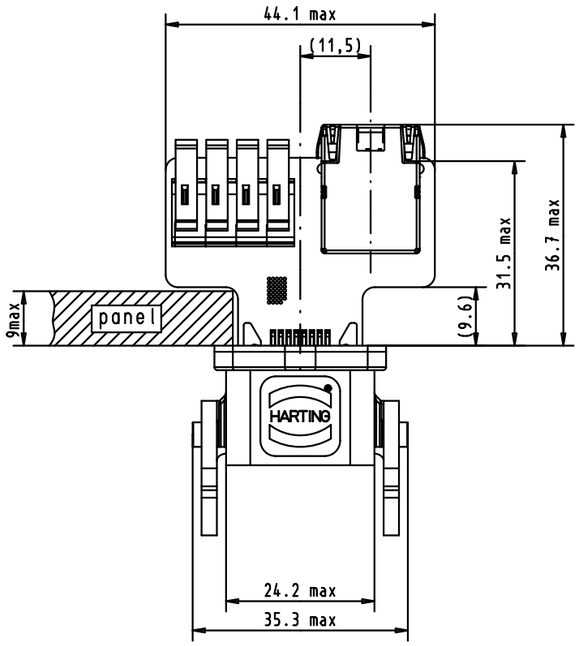

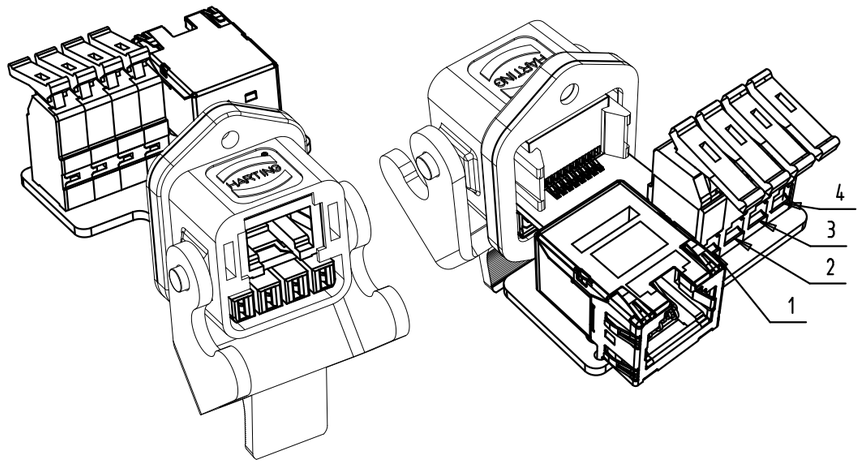

1) recommended wire: 0.5 to 2.5 mm2
2) maximal curent intensity 16 Amps
3) maximal panel thickness 9 mm
4) recommended panel cutout

scale 1:1

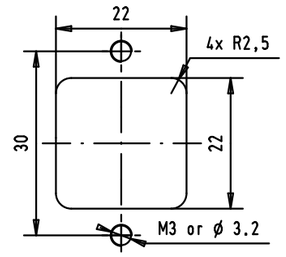

5) recommended wire insulator cut

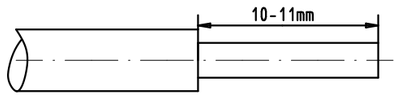

				Dat.	Name
36289	22/02/12	SD	Detail.	02/09/03	S.H.
35634	18/12/08	AB	Insp.	22/02/12	JMV
31536	02/09/03	S.H.	Stand.		
31529	22/07/03	S.H.			
31350	15/10/02	S.H.			
Mod.	Dat.	Name			

All Dim. in mm
Orig. Size DIN A 3

RJ industrial
hybrid panel feed through
with power cage clamp (16 Amps)
and RJ45 modular jack

Maßstab/ Scale

HARTING ELEKTRONIK
F-95972 Paris

TB 09 45 225 1300

Sub.

Blatt/ Page

Alle Rechte vorbehalten/ All rights reserved