Chipsmall Limited consists of a professional team with an average of over 10 year of expertise in the distribution of electronic components. Based in Hongkong, we have already established firm and mutual-benefit business relationships with customers from,Europe,America and south Asia,supplying obsolete and hard-to-find components to meet their specific needs.

With the principle of “Quality Parts,Customers Priority,Honest Operation,and Considerate Service”,our business mainly focus on the distribution of electronic components. Line cards we deal with include Microchip,ALPS,ROHM,Xilinx,Pulse,ON,Everlight and Freescale. Main products comprise IC,Modules,Potentiometer,IC Socket,Relay,Connector.Our parts cover such applications as commercial,industrial, and automotives areas.

We are looking forward to setting up business relationship with you and hope to provide you with the best service and solution. Let us make a better world for our industry!

Contact us

Tel: +86-755-8981 8866 Fax: +86-755-8427 6832
Email & Skype: info@chipsmall.com Web: www.chipsmall.com
Address: A1208, Overseas Decoration Building, #122 Zhenhua RD., Futian, Shenzhen, China

Alle Rechte vorbehalten/ *All rights reserved*

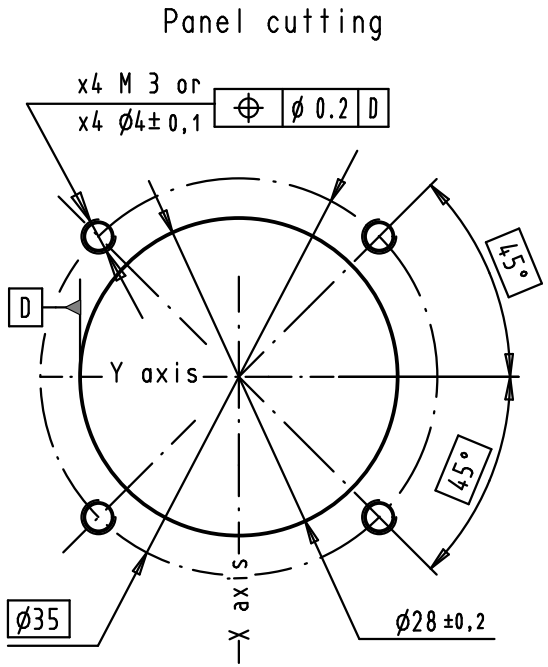

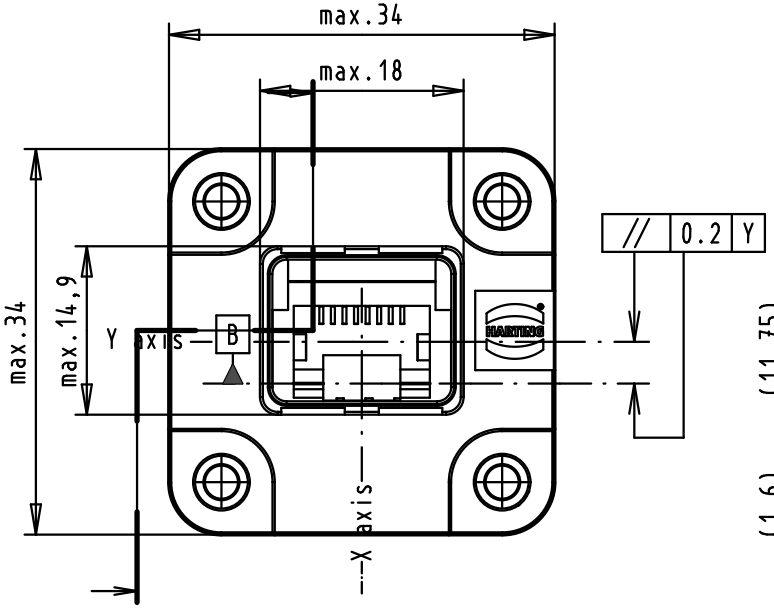

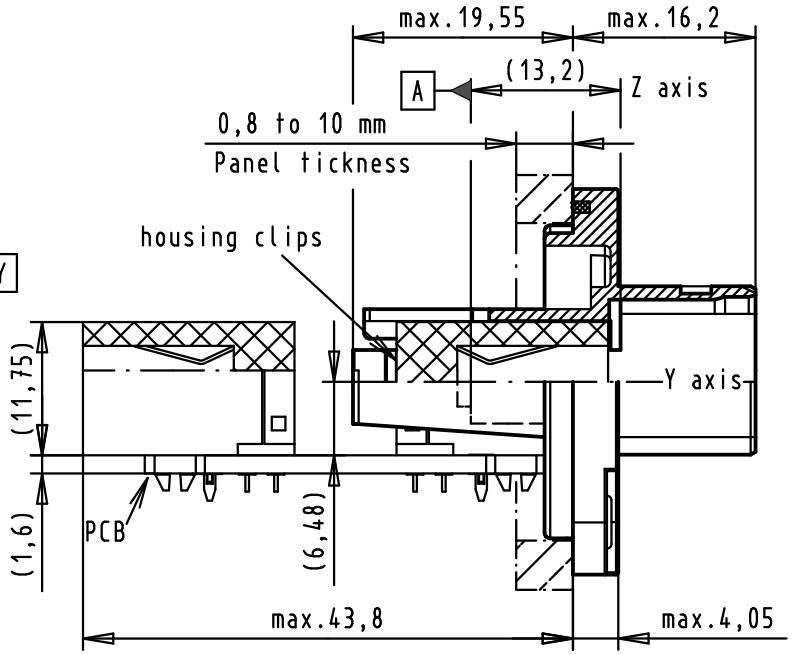

Connector pitchs on panel = 35 mm
Receptacle mating face acc. to
IEC 61076-3-106 - variant 04

jack references A and B
according to IEC 60603-7
the jack is located in the housing
in the X,Y,Z axis after locking clips.
The assembled PC Board is delivered to customer
not locked in the housing.

Screwing by x4 M3 screws with torque 0.5 N.m
with flat washer under the screw .

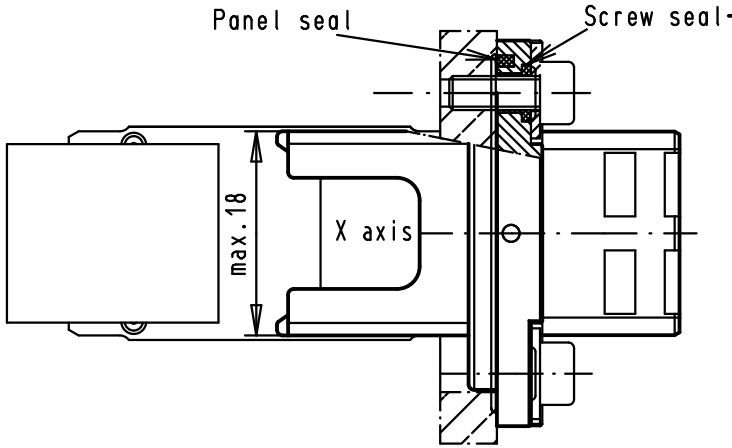

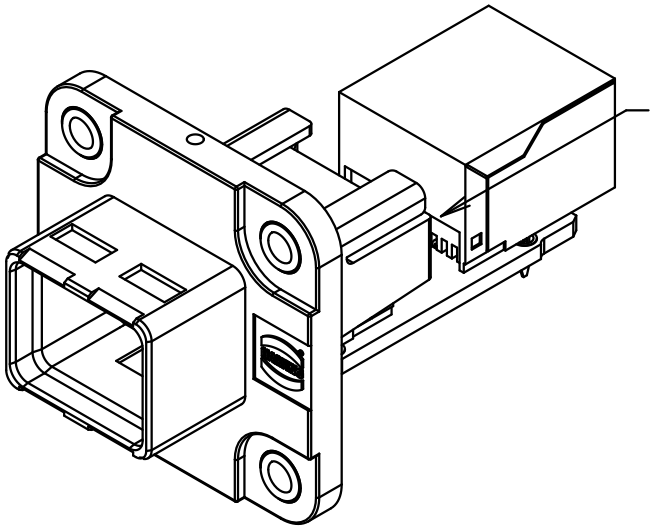

				Dat.	Name
			Detail.	19/dec/05	JFB
33812	23/oct/06	JFB	Insp.		
33468	10/may/06	JFB	Stand.		
33405	20/dec/05	BD			
33289	19/dec/05	BD			
Mod.	Dat.	Name			

All Dim. in mm
Orig. Size DIN A 3

Push-pull RJ Industrial
Easy install IP 67 receptacle
and right angled jack 8 poles

Maßstab/ *Scale* 1,5:1

HARTING EURL
F-95972 Paris

TB 09 45 245 1130

Sub.

Blatt/ *Page* 1 / 1