Chipsmall Limited consists of a professional team with an average of over 10 year of expertise in the distribution of electronic components. Based in Hongkong, we have already established firm and mutual-benefit business relationships with customers from,Europe,America and south Asia,supplying obsolete and hard-to-find components to meet their specific needs.

With the principle of “Quality Parts,Customers Priority,Honest Operation,and Considerate Service”,our business mainly focus on the distribution of electronic components. Line cards we deal with include Microchip,ALPS,ROHM,Xilinx,Pulse,ON,Everlight and Freescale. Main products comprise IC,Modules,Potentiometer,IC Socket,Relay,Connector.Our parts cover such applications as commercial,industrial, and automotives areas.

We are looking forward to setting up business relationship with you and hope to provide you with the best service and solution. Let us make a better world for our industry!

Contact us

Tel: +86-755-8981 8866 Fax: +86-755-8427 6832
Email & Skype: info@chipsmall.com Web: www.chipsmall.com
Address: A1208, Overseas Decoration Building, #122 Zhenhua RD., Futian, Shenzhen, China

CODICE P/N	MATERIALE MATERIAL	FINITURA PLATING	SEZ. FILO WIRE SIZE (mm²)	Ø ISOLANTE Ø INSULATION (mm)	±0.2 mm A	B	C	D	IMBALLO (S.P.Q.) / PACKAGING * pz. per box in 6 bobine * pcs. per box in 6 reels
94529-1103	BRONZO FOSFOROSO PHOSPHOR BRONZE	PRESTAGNATO TIN PREPLATED	0.35-0.50	1.70 max.*	1.9	2.2	2.7	2.7	24.000
94529-1201	OTTONE BRASS		0.50-1.00	2.80 max.	3.0	2.9	4.0	4.5	21.000
94529-1203	BRONZO FOSFOROSO PHOSPHOR BRONZE								

* FILO AD ISOLAMENTO RIDOTTO
* LOW INSULATION WIRE

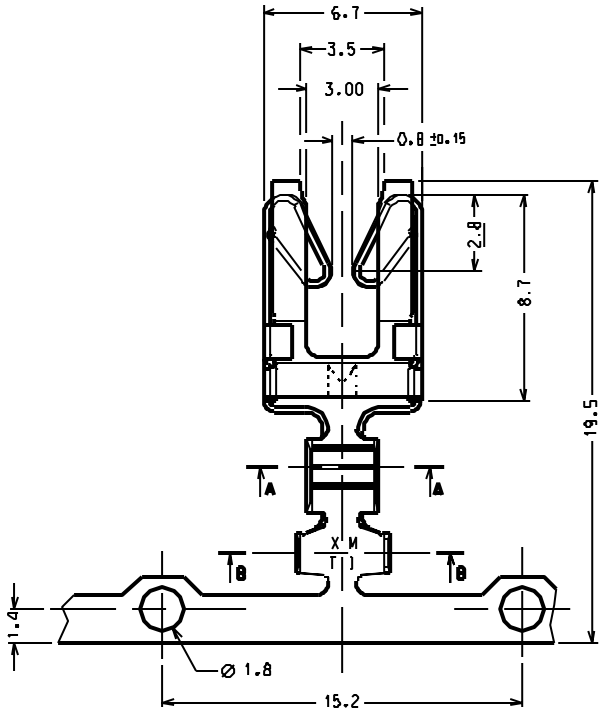

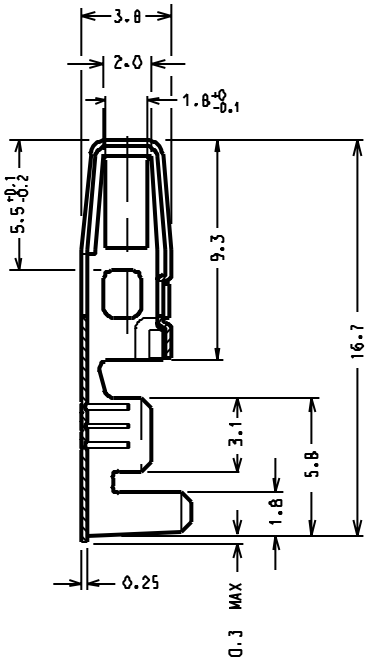

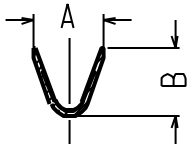

SECTION A - A

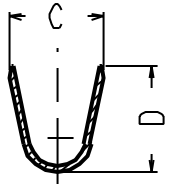

SECTION B - B

CARATTERISTICHE PRODOTTO SECONDO PS-94529-001

PRODUCT CHARACTERISTICS ACCORDING TO PS-94529-002

SENSO DI SVOLGIMENTO DALLA BOBINA

DIRECTION OFF REEL

Std. Descr: "FORK TERM STRAIGHT 1.5 GAP (insert WIRE SIZE)"

EC NO. Z2002-0020	DRWN: L.Santessa 04-09-01	CH'K: N.Tesioquza 04-09-01	APPR: B.Zuin 04-09-01	DESCRIPTION	REV		

QUALITY SYMBOLS: MAJOR (M) =; SIGNIF. (S) =; CRITICAL (C) =

GENERAL TOLERANCES: (UNLESS SPECIFIED)

	mm	INCH
4 PLACES	±0.	±.
3 PLACES	±0.	±.
2 PLACES	±0.10	±.
1 PLACE	±0.15	±.
ANGULAR: ± 3°		

DRAFT WHERE APPLICABLE MUST REMAIN WITHIN DIMENSIONS

SCALE 5:1 | DESIGN UNITS ☐mm ☐INCH | FIRST ANGLE PROJECTION | DIMENSIONS: ☐ mm/INCH ☐ INCH/mm ☒ mm ONLY | SHT | REV | REVISE ON CAD ONLY

DRAWN BY & DATE: Gottardo 05-03-93

CHECKED BY & DATE:

APPROVED BY & DATE: Previato 05-03-93

TITLE: CONTATTO A FORCELLA DIRITTO - SPESSORE NOM. DEL MASCHIO: 1.5 mm - STRAIGHT FORK TERMINAL TAB SIZE: 1.5 mm

MOLEX INCORPORATED

CAD FILENAME: SD94529001.DGN | MATERIAL NO.: vedi tabella | DRAWING NO.: SD-94529-001 | SHEET NO.: 1/1

A3

THIS DRAWING CONTAINS INFORMATION THAT IS PROPRIETARY TO MOLEX INCORPORATED AND SHOULD NOT BE USED WITHOUT WRITTEN PERMISSION.

SIZE A3