Chipsmall Limited consists of a professional team with an average of over 10 year of expertise in the distribution of electronic components. Based in Hongkong, we have already established firm and mutual-benefit business relationships with customers from,Europe,America and south Asia,supplying obsolete and hard-to-find components to meet their specific needs.

With the principle of “Quality Parts,Customers Priority,Honest Operation,and Considerate Service”,our business mainly focus on the distribution of electronic components. Line cards we deal with include Microchip,ALPS,ROHM,Xilinx,Pulse,ON,Everlight and Freescale. Main products comprise IC,Modules,Potentiometer,IC Socket,Relay,Connector.Our parts cover such applications as commercial,industrial, and automotives areas.

We are looking forward to setting up business relationship with you and hope to provide you with the best service and solution. Let us make a better world for our industry!

Contact us

Tel: +86-755-8981 8866 Fax: +86-755-8427 6832
Email & Skype: info@chipsmall.com Web: www.chipsmall.com
Address: A1208, Overseas Decoration Building, #122 Zhenhua RD., Futian, Shenzhen, China

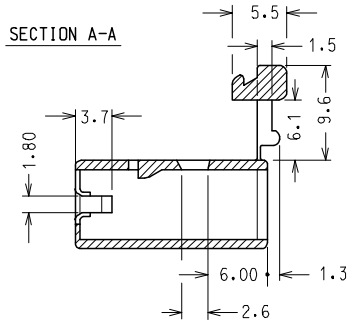

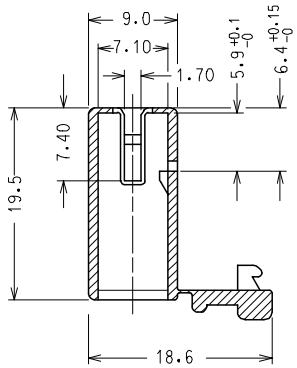

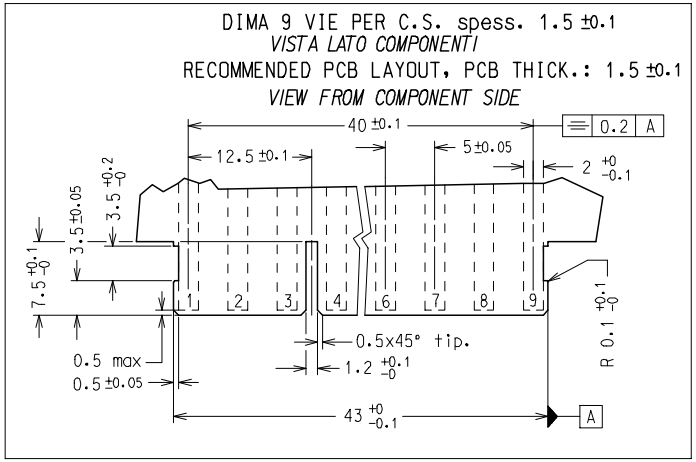

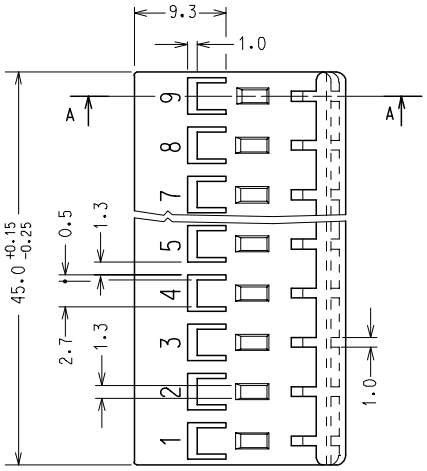

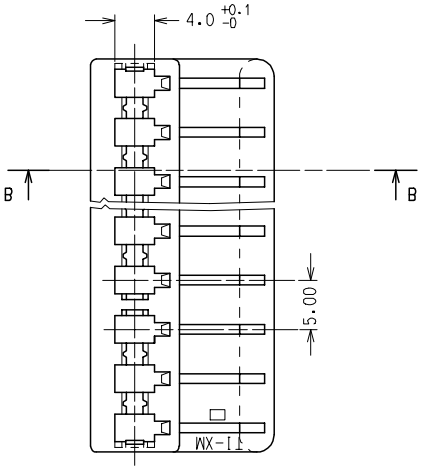

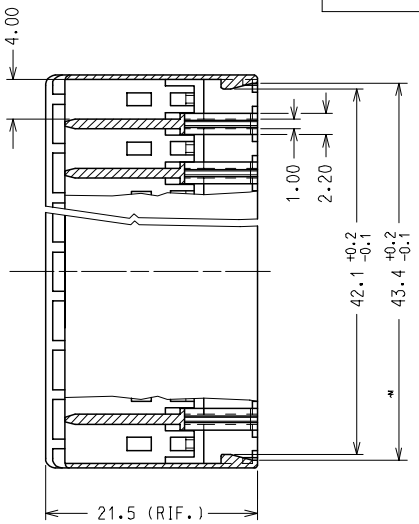

CODICE P/N	MATERIAL
94529-9109	PA 6.6 NAT. UL94 V2 GWT 850 °C
94529-4109	NYLON 6.6 GWT 750 °C sec. IEC 60335-1 TEST METHOD IEC 60695-2-11 NATURAL

NOTA: LE DIMENSIONI VANNO MISURATE CON CORPI STABILIZZATI.
(AUMENTO IN PESO DEL 2.7 %)

NOTE: PARTS SHALL BE DIMENSIONALLY CHECKED AFTER ATTAINING EQUILIBRIUM CONDITIONS E.G. 2.7 % INCREASE IN WEIGHT FOR HUMIDITY ABSORPTION FROM DRY STATUS.

CARATTERISTICHE PRODOTTO SECONDO PS-94529
PRODUCT CHARACTERISTICS ACCORDING TO PS-94529 E

CONFEZIONE: 2500 pz. IN SCATOLA
PACKAGING: 2500 pcs IN CARTON BOX

SPQ: 2500 pz.

Descr.Std: HSG FOR FORK TERMINAL 9 CKT

EC NO: Z2007-0038
DRWN: SBARBIER 2006/09/20
CHKD: RSANDANO 2006/09/20
APPR: FBISELLO 2006/09/25
DESCRIPTION
REV
A2

QUALITY SYMBOLS
▼=0
▽=0

GENERAL TOLERANCES (UNLESS SPECIFIED)

	mm	INCH
4 PLACES	± ---	± ---
3 PLACES	± ---	± ---
2 PLACES	± 0.1	± ---
1 PLACE	± 0.2	± ---
ANGULAR ± 2 °		

DRAFT WHERE APPLICABLE MUST REMAIN WITHIN DIMENSIONS

DIMENSION STYLE: MM ONLY
SCALE: 2:1
DESIGN UNITS: METRIC
FIRST ANGLE PROJECTION

DRAWN BY: FGOTTARDO DATE: 2001/09/17
CHECKED BY: MTESTAGUZZA DATE: 2001/09/17
APPROVED BY: GZUIN DATE: 2001/09/17

TITLE: 9 CKT HOUSING FOR STRAIGHT FORK TERMINAL

molex MOLEX INCORPORATED

MATERIAL NO.: SEE TABLE
DOCUMENT NO.: SD-94529-025
SHEET NO.: 1 OF 00
SIZE: A3

THIS DRAWING CONTAINS INFORMATION THAT IS PROPRIETARY TO MOLEX INCORPORATED AND SHOULD NOT BE USED WITHOUT WRITTEN PERMISSION