Chipsmall Limited consists of a professional team with an average of over 10 year of expertise in the distribution of electronic components. Based in Hongkong, we have already established firm and mutual-benefit business relationships with customers from,Europe,America and south Asia,supplying obsolete and hard-to-find components to meet their specific needs.

With the principle of “Quality Parts,Customers Priority,Honest Operation,and Considerate Service”,our business mainly focus on the distribution of electronic components. Line cards we deal with include Microchip,ALPS,ROHM,Xilinx,Pulse,ON,Everlight and Freescale. Main products comprise IC,Modules,Potentiometer,IC Socket,Relay,Connector.Our parts cover such applications as commercial,industrial, and automotives areas.

We are looking forward to setting up business relationship with you and hope to provide you with the best service and solution. Let us make a better world for our industry!

Contact us

Tel: +86-755-8981 8866 Fax: +86-755-8427 6832
Email & Skype: info@chipsmall.com Web: www.chipsmall.com
Address: A1208, Overseas Decoration Building, #122 Zhenhua RD., Futian, Shenzhen, China

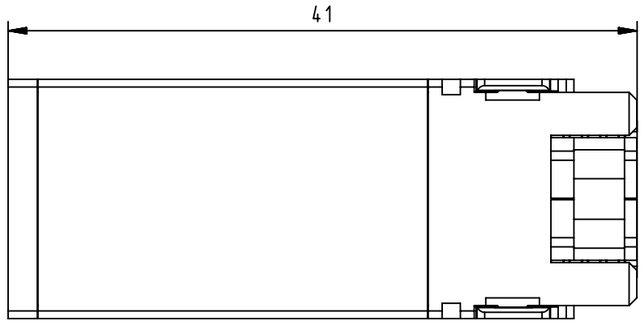

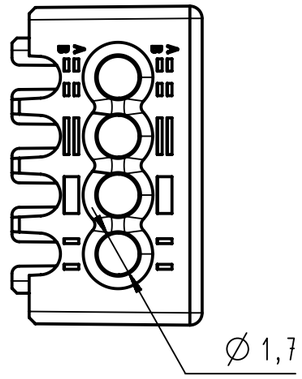

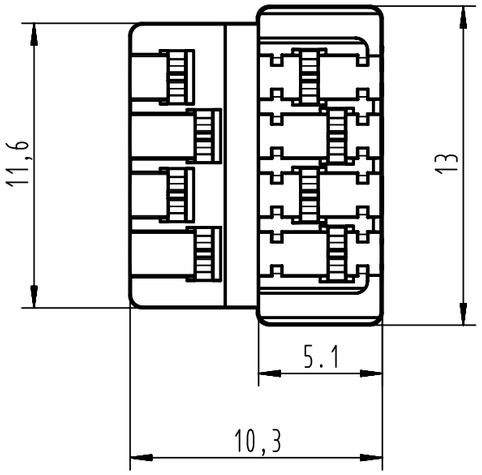

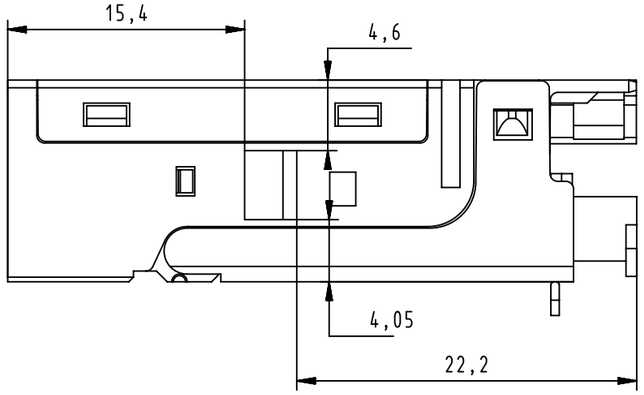

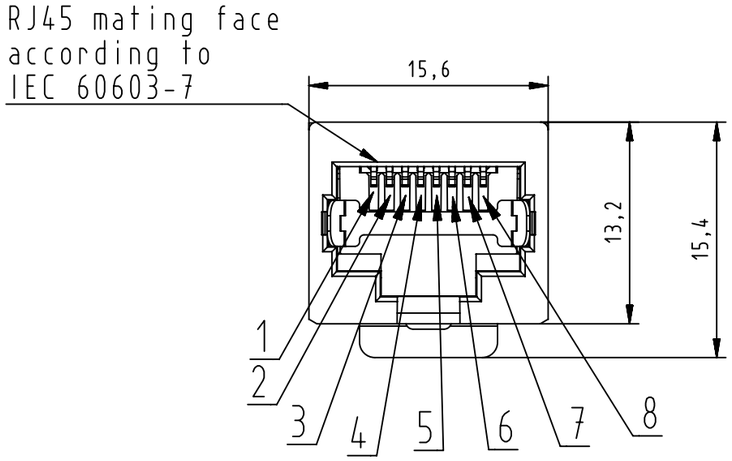

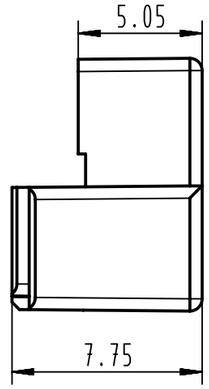

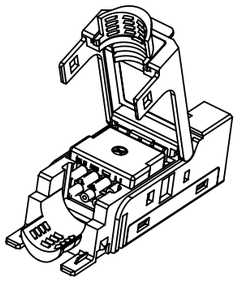

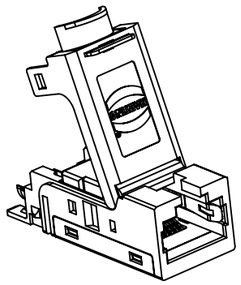

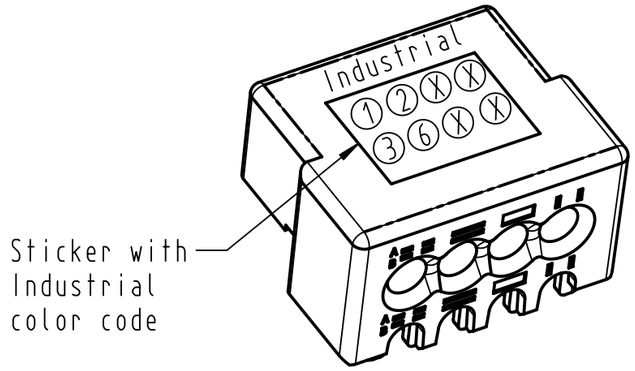

HARTING	All rights reserved	Created by BARLEMONT	Inspected by DAUCHELLE	Standardisation HOFFMANN	Date 2013-04-18	State Final Release
	Department EC PD - FR	Title RJ1 10G RJ45 IP20 Cat.6 8P IDC AWG 28-24				Doc-Key / ECM-Nr. 100229920/UGD/003/B 500000061169
HARTING Electronics GmbH D-32339 Espelkamp		Type TB	Number 09455451561		Rev. B	Page 1/1

A3