Chipsmall Limited consists of a professional team with an average of over 10 year of expertise in the distribution of electronic components. Based in Hongkong, we have already established firm and mutual-benefit business relationships with customers from,Europe,America and south Asia,supplying obsolete and hard-to-find components to meet their specific needs.

With the principle of “Quality Parts,Customers Priority,Honest Operation,and Considerate Service”,our business mainly focus on the distribution of electronic components. Line cards we deal with include Microchip,ALPS,ROHM,Xilinx,Pulse,ON,Everlight and Freescale. Main products comprise IC,Modules,Potentiometer,IC Socket,Relay,Connector.Our parts cover such applications as commercial,industrial, and automotives areas.

We are looking forward to setting up business relationship with you and hope to provide you with the best service and solution. Let us make a better world for our industry!

Contact us

Tel: +86-755-8981 8866 Fax: +86-755-8427 6832
Email & Skype: info@chipsmall.com Web: www.chipsmall.com
Address: A1208, Overseas Decoration Building, #122 Zhenhua RD., Futian, Shenzhen, China

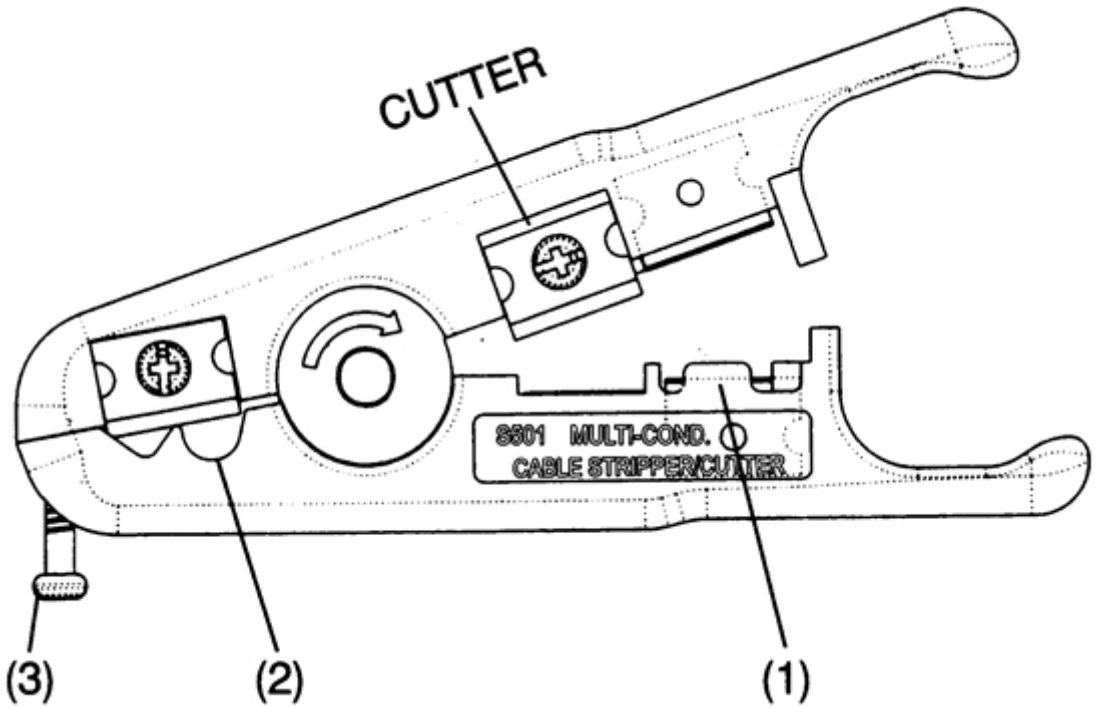

(1) - Flat wire stripper, by inserting cable between the stripper blades.
Squeeze handles, cable must be keep perpendicular and then pull from the tool.

(2) - Round wire stripper, by rotating 1-3 times
at counterclockwise,then open the jaw
and remove the cable jacket.

(3) - Adjusting bolt to control for different cable sizes.

- Delivery including 10 reserve blades

Coating	A= mm²	V= mm³	m= g	Mat. INELCO p/n 061-501	
All Dimensions in mm Original Size DIN A4	Scale 1:1	Free size tol.		Ref. Sub. TB 09 45 800 0002 03.05.10	
HARTING	All rights reserved Department EC PD - DE	Created by HASSE	Inspected by LINDKAMP	Standardisation HOFFMANN	Date 2013-01-22	State Final Release
HARTING Electronics GmbH D-32339 Espelkamp		Title HARTING RJI Univers cable stripping tool			Doc-Key / ECM-Nr. 100527062/UGD/001/A 500000058428	
		Type TB	Number 09458000002		Rev. A	Page 1/1

A4