Chipsmall Limited consists of a professional team with an average of over 10 year of expertise in the distribution of electronic components. Based in Hongkong, we have already established firm and mutual-benefit business relationships with customers from,Europe,America and south Asia,supplying obsolete and hard-to-find components to meet their specific needs.

With the principle of “Quality Parts,Customers Priority,Honest Operation,and Considerate Service”,our business mainly focus on the distribution of electronic components. Line cards we deal with include Microchip,ALPS,ROHM,Xilinx,Pulse,ON,Everlight and Freescale. Main products comprise IC,Modules,Potentiometer,IC Socket,Relay,Connector.Our parts cover such applications as commercial,industrial, and automotives areas.

We are looking forward to setting up business relationship with you and hope to provide you with the best service and solution. Let us make a better world for our industry!

Contact us

Tel: +86-755-8981 8866 Fax: +86-755-8427 6832
Email & Skype: info@chipsmall.com Web: www.chipsmall.com
Address: A1208, Overseas Decoration Building, #122 Zhenhua RD., Futian, Shenzhen, China

Alle Rechte vorbehalten/ *All rights reserved*

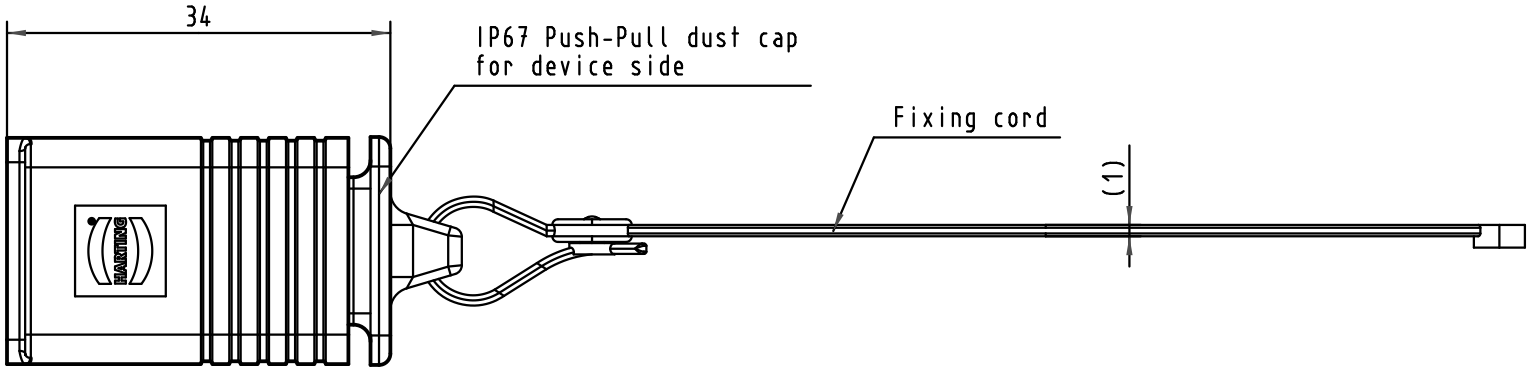

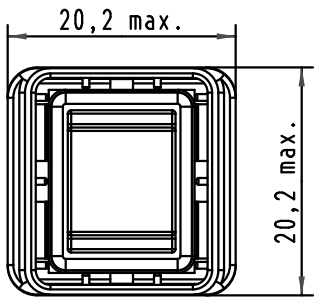

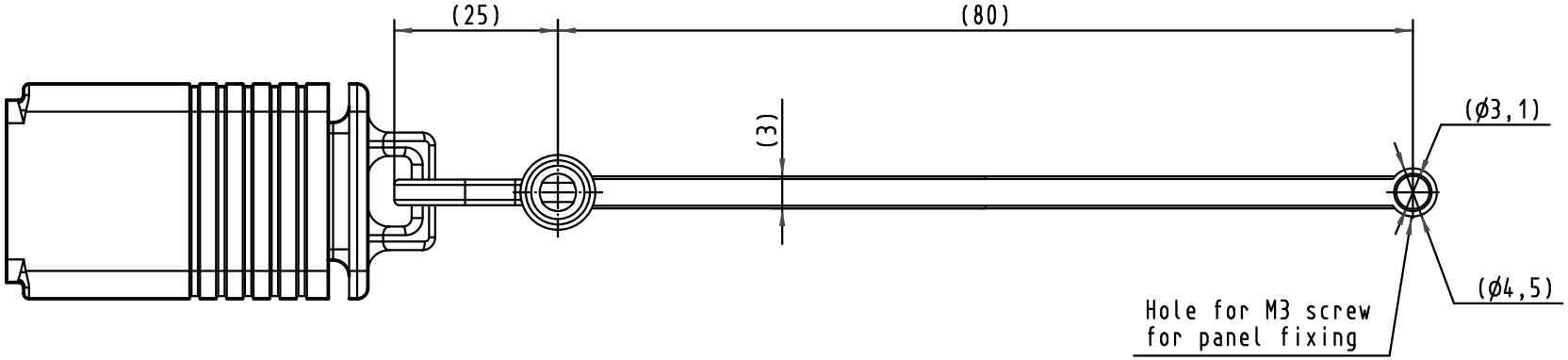

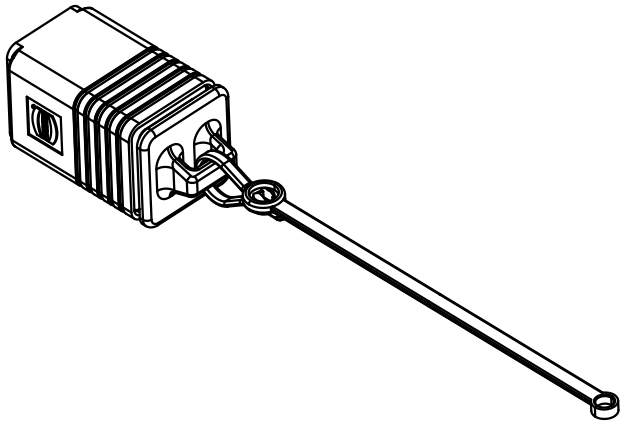

Preconised range screwing toraue for M3 screw: 0.3N.m to 0.35N.m

Part number	Description	Quantity
09 45 845 0014	IP67 dust cap for device side + fixing cord	1
09 45 845 0014 XL	IP67 dust cap for device side + fixing cord	100

				Dat.	Name
			Detail.	04May2010	ED
			Insp.		
			Stand.		
36078	04May2010	ED			
Mod.	Dat.	Name			

All Dim. in mm
Orig. Size DIN A4

RJ Industrial

Harting Push-Pull dust cap for device side, IP67, with black plastic fixing cord, M3 eyelet

Maßstab/ *Scale* 1.5:1

HARTING EURL
F-95972 Paris

TB 09 45 845 0014

Sub.

Blatt/ *Page* 1/1