Chipsmall Limited consists of a professional team with an average of over 10 year of expertise in the distribution of electronic components. Based in Hongkong, we have already established firm and mutual-benefit business relationships with customers from,Europe,America and south Asia,supplying obsolete and hard-to-find components to meet their specific needs.

With the principle of “Quality Parts,Customers Priority,Honest Operation,and Considerate Service”,our business mainly focus on the distribution of electronic components. Line cards we deal with include Microchip,ALPS,ROHM,Xilinx,Pulse,ON,Everlight and Freescale. Main products comprise IC,Modules,Potentiometer,IC Socket,Relay,Connector.Our parts cover such applications as commercial,industrial, and automotives areas.

We are looking forward to setting up business relationship with you and hope to provide you with the best service and solution. Let us make a better world for our industry!

Contact us

Tel: +86-755-8981 8866 Fax: +86-755-8427 6832
Email & Skype: info@chipsmall.com Web: www.chipsmall.com
Address: A1208, Overseas Decoration Building, #122 Zhenhua RD., Futian, Shenzhen, China

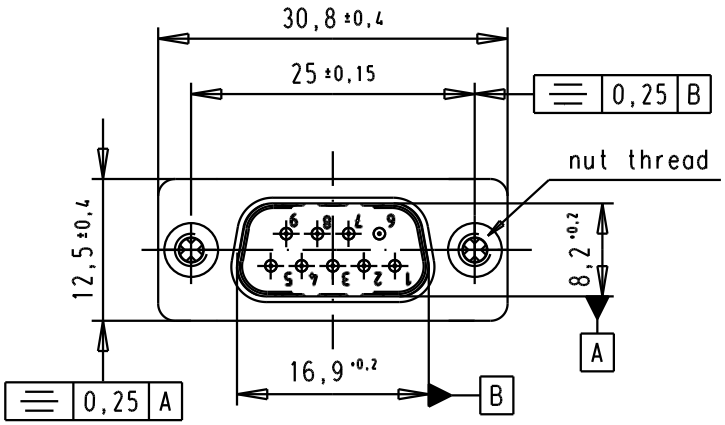

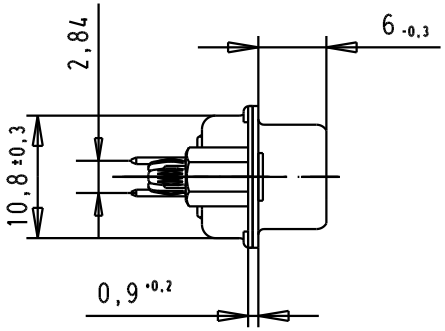

SPECIFICATION

Mating Cycles	500
Filter type	C
Capacitance	470pf ±20%
Working Voltage	100v
Current Rating	7.5A
Insulation Resistance	>1GΩ

FREQUENCY (MHz)	ATTENUATION (dB)
5	-
10	1dB
50	10dB
100	15dB
500	35dB
1000	32dB

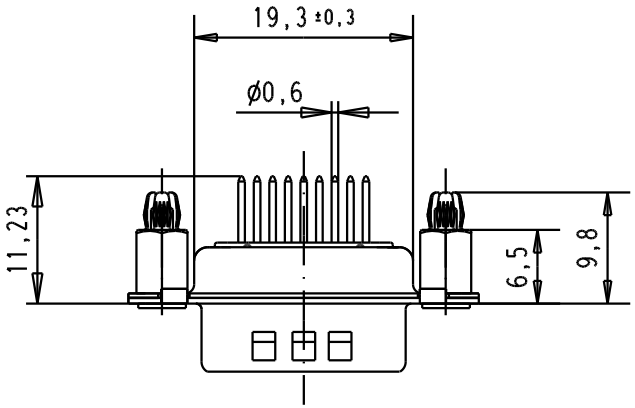

PCB Layout, Component side
PCB thickness 1,6 mm

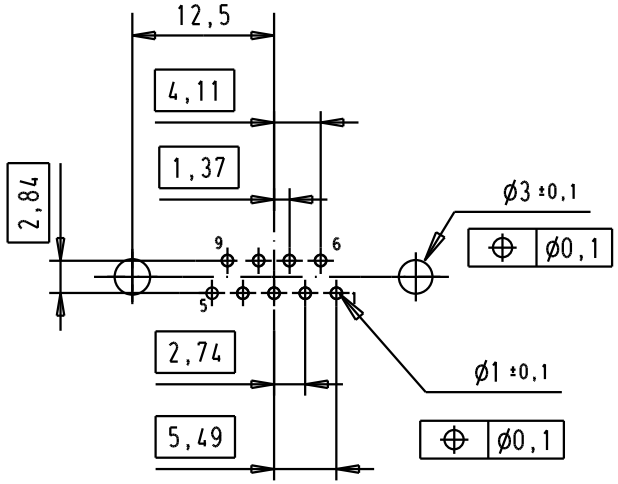

							Dat.	Name	All Dim. in mm Orig. Size DIN A 4	D-Sub, male, straight, 9 Poles, solder pins, tin plated shell with dimples, spacer nuts and board-locks	Ma?Mstab/ Scale 1.5:1
						Detail.	8-JUL-02	CV			
						Insp.					
						Stand.					
09641227226	M3		33241	14/10/05	JMDR	HARTING EURL F-95972 Paris				TB 0964122722x	Blatt/ Page 2/3
09641227225	UNC 4-40		31058	8-JUL-02	CV						
Part number	Nut thread		Mod.	Dat.	Name					Sub.	