Chipsmall Limited consists of a professional team with an average of over 10 year of expertise in the distribution of electronic components. Based in Hongkong, we have already established firm and mutual-benefit business relationships with customers from,Europe,America and south Asia,supplying obsolete and hard-to-find components to meet their specific needs.

With the principle of “Quality Parts,Customers Priority,Honest Operation,and Considerate Service”,our business mainly focus on the distribution of electronic components. Line cards we deal with include Microchip,ALPS,ROHM,Xilinx,Pulse,ON,Everlight and Freescale. Main products comprise IC,Modules,Potentiometer,IC Socket,Relay,Connector.Our parts cover such applications as commercial,industrial, and automotives areas.

We are looking forward to setting up business relationship with you and hope to provide you with the best service and solution. Let us make a better world for our industry!

Contact us

Tel: +86-755-8981 8866 Fax: +86-755-8427 6832
Email & Skype: info@chipsmall.com Web: www.chipsmall.com
Address: A1208, Overseas Decoration Building, #122 Zhenhua RD., Futian, Shenzhen, China

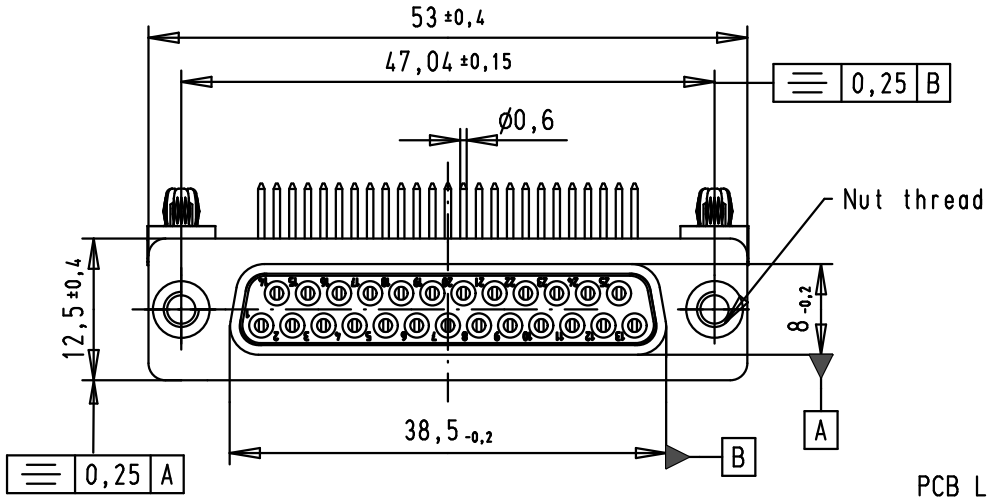

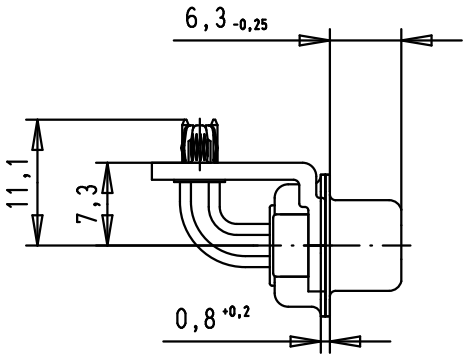

SPECIFICATION

Peformance level	PL2
Filter type	C
Capacitance	1000pf±20%
Working Voltage	100v
Current Rating	7.5A
Insulation Resistance	>1GΩ

FREQUENCY (MHz)	ATTENUATION (dB)
5	1dB
10	3dB
50	12dB
100	20dB
500	34dB
1000	30dB

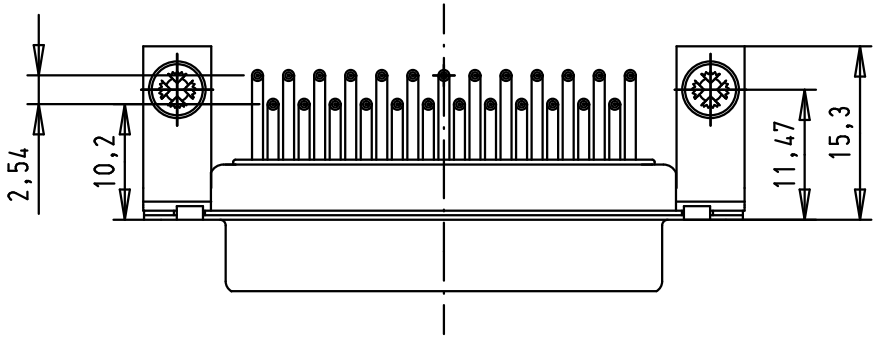

PCB Layout, Component side, thickness 1,6 mm

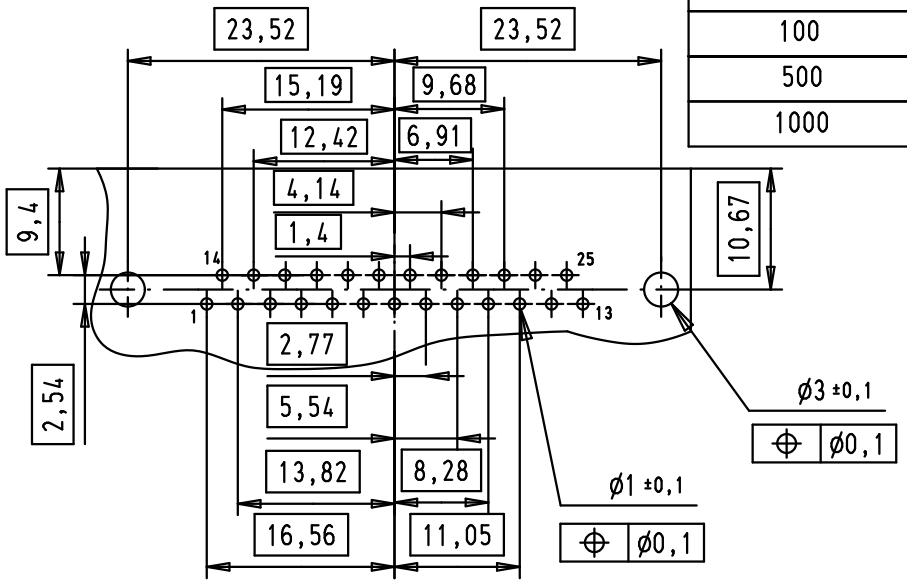

							Dat.	Name
						Detail.	8-JUL-02	CV
						Insp.	12/01/12	JB
			36283	12/01/12	SD	Stand.		
09643147233	M3		33416	19/01/06	JMDR			
09643147232	UNC 4-40		31058	8-JUL-02	CV			
Part number	Nut thread		Mod.	Dat.	Name			

All Dim. in mm
Orig. Size DIN A 4

D-Sub, female, angled, 25 Poles, turned solder pins, board-locks and clinch nuts

Ma?Mstab/ Scale 1.5:1

HARTING EURL
F-95972 Paris

TB 0964314723x

Sub.

Blatt/ Page 1/4