Chipsmall Limited consists of a professional team with an average of over 10 year of expertise in the distribution of electronic components. Based in Hongkong, we have already established firm and mutual-benefit business relationships with customers from,Europe,America and south Asia,supplying obsolete and hard-to-find components to meet their specific needs.

With the principle of “Quality Parts,Customers Priority,Honest Operation,and Considerate Service”,our business mainly focus on the distribution of electronic components. Line cards we deal with include Microchip,ALPS,ROHM,Xilinx,Pulse,ON,Everlight and Freescale. Main products comprise IC,Modules,Potentiometer,IC Socket,Relay,Connector.Our parts cover such applications as commercial,industrial, and automotives areas.

We are looking forward to setting up business relationship with you and hope to provide you with the best service and solution. Let us make a better world for our industry!

Contact us

Tel: +86-755-8981 8866 Fax: +86-755-8427 6832
Email & Skype: info@chipsmall.com Web: www.chipsmall.com
Address: A1208, Overseas Decoration Building, #122 Zhenhua RD., Futian, Shenzhen, China

Alle Rechte vorbehalten/ *All rights reserved*

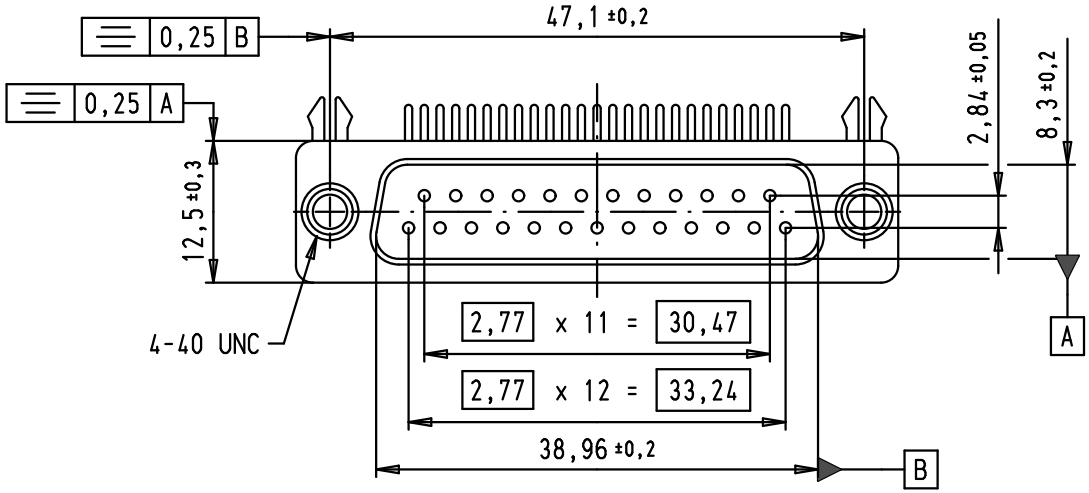

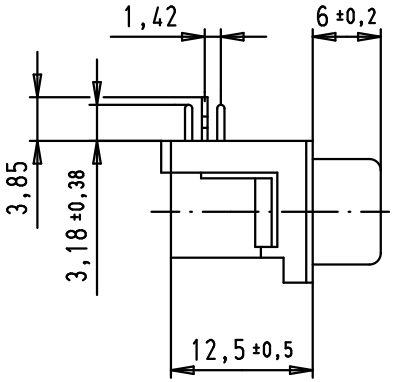

SPECIFICATIONS

FREQUENCY (MHz)	ATTENUATION (dB)
5	1
10	2
50	4
100	4,5
500	4,5
1000	4,5

Operating voltage	< 250 V AC
Working current	< 7,5 A
Insulation resistance	> 1GΩ
Contact resistance	< 15 mΩ
Dielectric withstanding voltage	500 V AC / minute

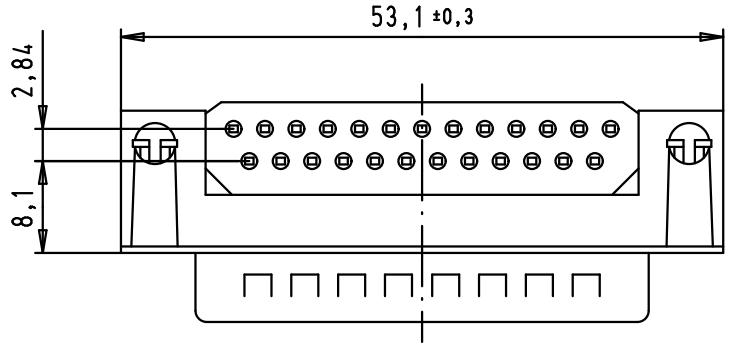

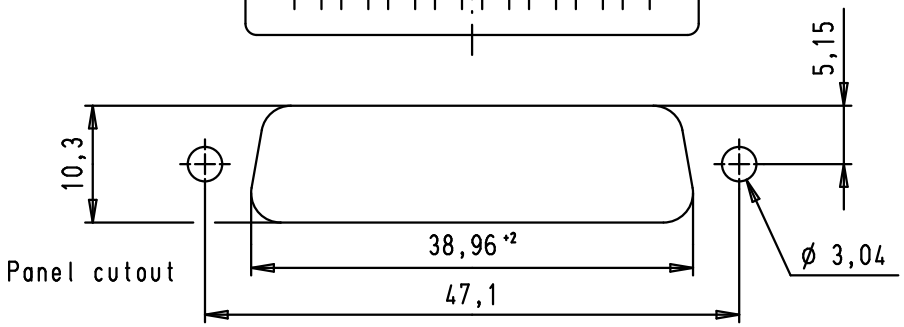

PCB layout, component side,
thickness between 1,6 and 3 mm

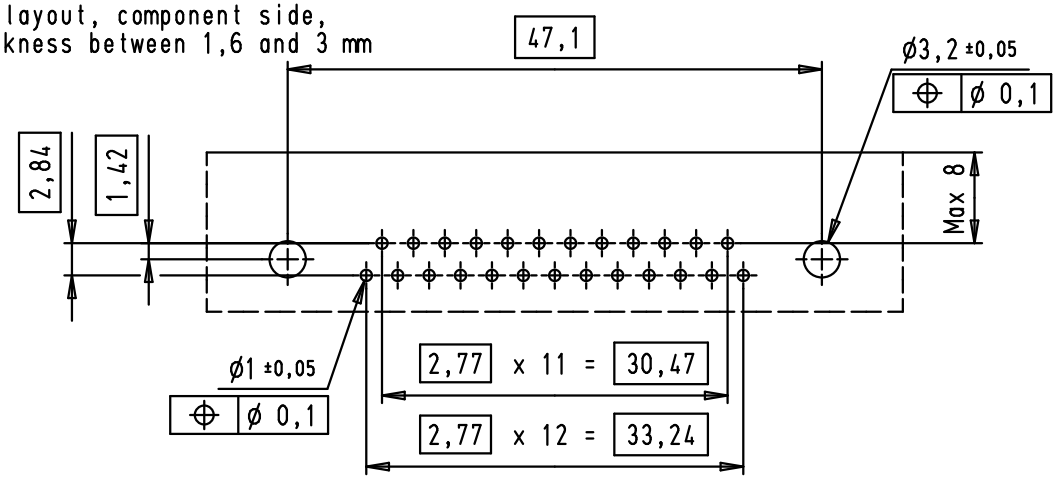

09 64 323 7802	PL3
Part number	Performance level

Mod.	Dat.	Name
EC02296	06/09/10	SC
EC00362	02/07/09	PK

	Dat.	Name
Detail.	02/07/09	PK
Insp.		
Stand.		

All Dim. in mm
Orig. Size DIN A 4

D-Sub, male, angled,
US footprint, 25 poles,
tin plated shell with dimples,
solder pins, ferrite filter

Maßstab/ *Scale* 1,5:1

HARTING EURL
F-95972 Paris

TB 09 64 323 7802

Sub.

Blatt/ *Page* 1/1