Chipsmall Limited consists of a professional team with an average of over 10 year of expertise in the distribution of electronic components. Based in Hongkong, we have already established firm and mutual-benefit business relationships with customers from,Europe,America and south Asia,supplying obsolete and hard-to-find components to meet their specific needs.

With the principle of “Quality Parts,Customers Priority,Honest Operation,and Considerate Service”,our business mainly focus on the distribution of electronic components. Line cards we deal with include Microchip,ALPS,ROHM,Xilinx,Pulse,ON,Everlight and Freescale. Main products comprise IC,Modules,Potentiometer,IC Socket,Relay,Connector.Our parts cover such applications as commercial,industrial, and automotives areas.

We are looking forward to setting up business relationship with you and hope to provide you with the best service and solution. Let us make a better world for our industry!

Contact us

Tel: +86-755-8981 8866 Fax: +86-755-8427 6832
Email & Skype: info@chipsmall.com Web: www.chipsmall.com
Address: A1208, Overseas Decoration Building, #122 Zhenhua RD., Futian, Shenzhen, China

Alle Rechte vorbehalten/ *All rights reserved*

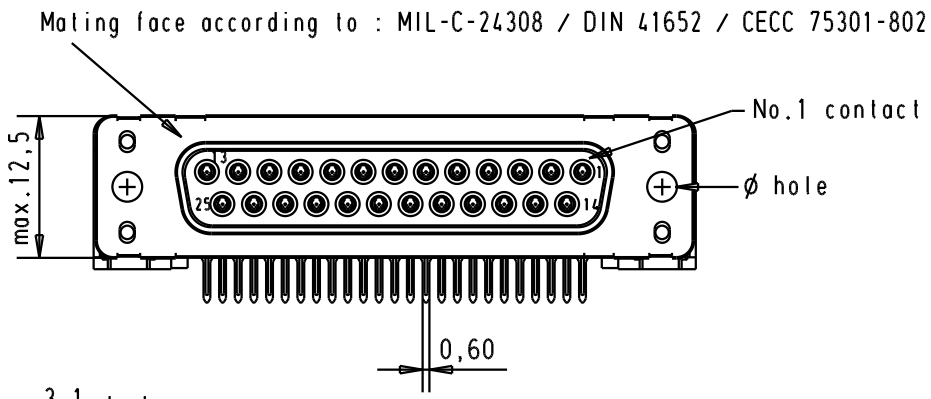

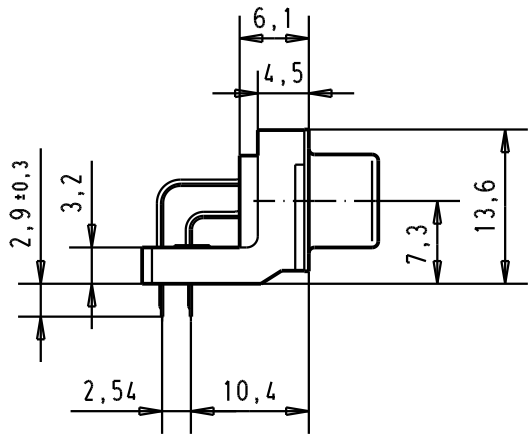

Printed board layout
component side

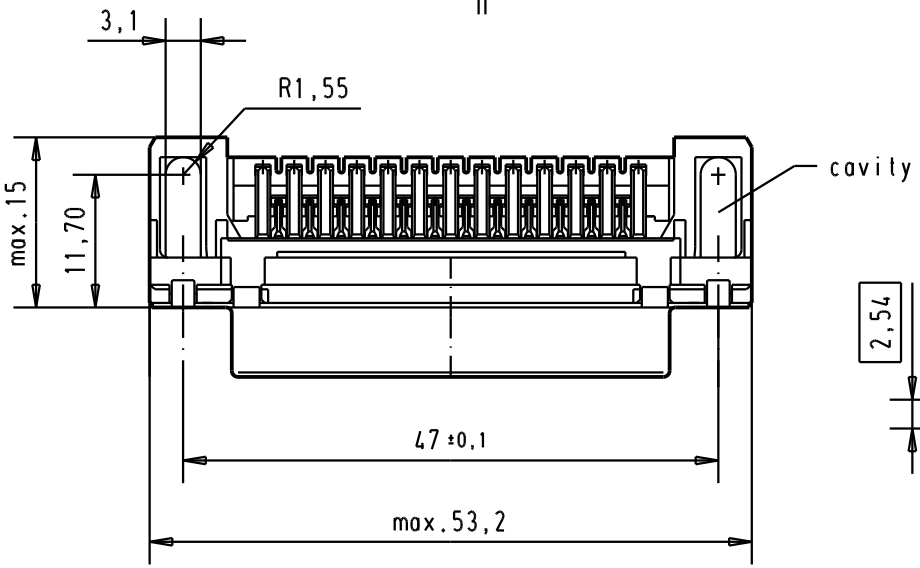

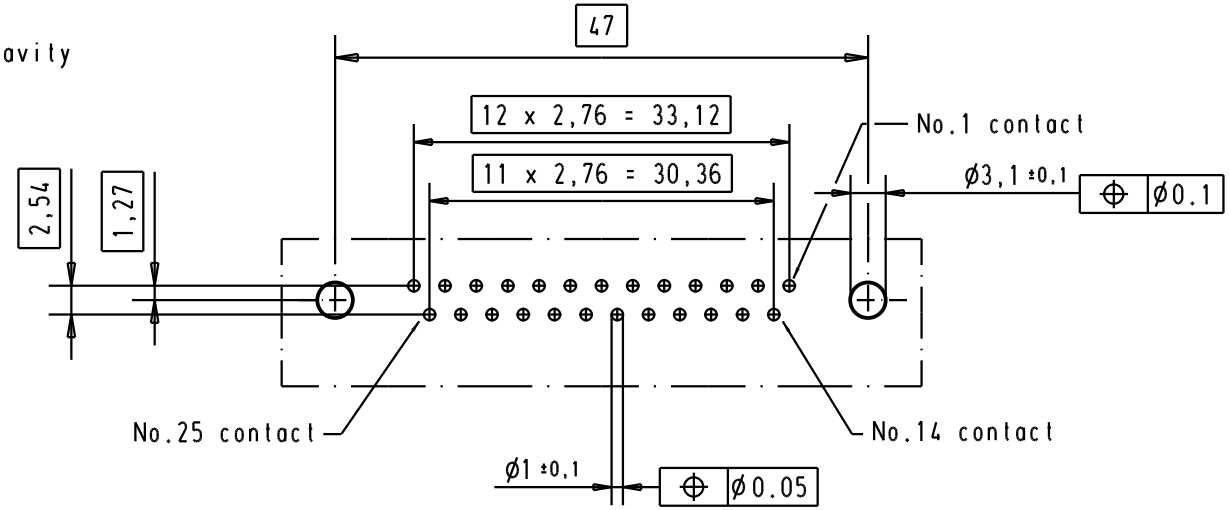

09 66 312 3600	3.1 ± 0.1	1	31892	05/05/04	JH
09 66 312 6600	3.1 ± 0.1	2	29773	18-APR-02	CV
09 66 312 7600	3.1 ± 0.1	3	27960	28/nov/00	ALSPACE
Part number	ø hole	Performance level	Mod.	Dat.	Name

	Dat.	Name
Detail.	28/nov/00	ALSPACE
Insp.		
Stand.		

All Dim. in mm
Orig. Size DIN A 4

D-Sub 25 poles standard angle female,solder pin with hole

Maßstab/ *Scale* 1.5:1

HARTING EURL
F-95972 Paris

TB 0966312x60x

Sub.

Blatt/ *Page* 1