Chipsmall Limited consists of a professional team with an average of over 10 year of expertise in the distribution of electronic components. Based in Hongkong, we have already established firm and mutual-benefit business relationships with customers from,Europe,America and south Asia,supplying obsolete and hard-to-find components to meet their specific needs.

With the principle of “Quality Parts,Customers Priority,Honest Operation,and Considerate Service”,our business mainly focus on the distribution of electronic components. Line cards we deal with include Microchip,ALPS,ROHM,Xilinx,Pulse,ON,Everlight and Freescale. Main products comprise IC,Modules,Potentiometer,IC Socket,Relay,Connector.Our parts cover such applications as commercial,industrial, and automotives areas.

We are looking forward to setting up business relationship with you and hope to provide you with the best service and solution. Let us make a better world for our industry!

Contact us

Tel: +86-755-8981 8866 Fax: +86-755-8427 6832
Email & Skype: info@chipsmall.com Web: www.chipsmall.com
Address: A1208, Overseas Decoration Building, #122 Zhenhua RD., Futian, Shenzhen, China

Alle Rechte vorbehalten/ *All rights reserved*

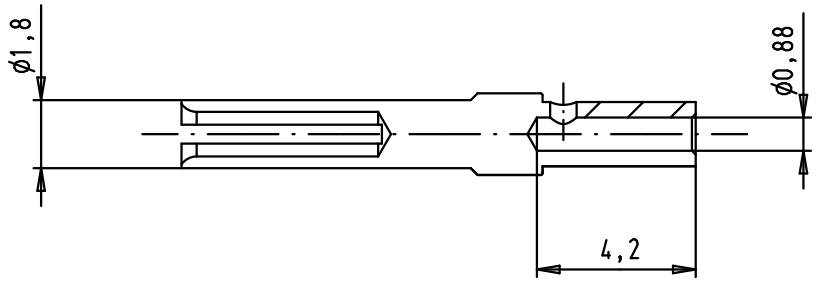

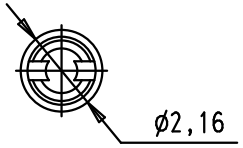

Crimping of AWG 22-26 : hand tool 09 99 000 0501
and locator 09 99 000 0531

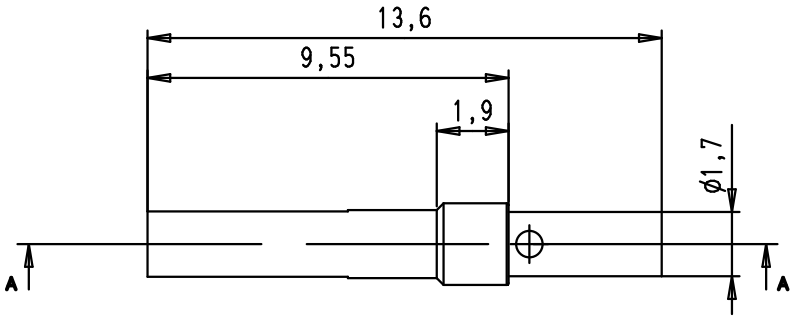

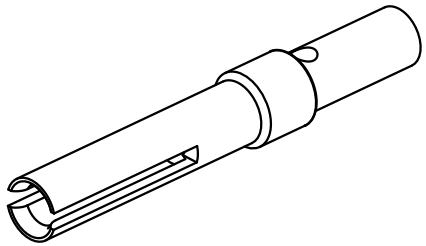

5000	09 67 000 5476 580	PL1
100	09 67 000 5476	PL1
Bulk packaging	Part number	Gold plating (over nickel)

Mod.	Dat.	Name
EC04018	07/11/11	SD
EC01739	29apr2010	LP
EC01656	12apr2010	LP

	Dat.	Name
Detail.	12apr2010	LP
Insp.	07/11/11	JB
Stand.		

All Dim. in mm
Orig. Size DIN A 4

HARTING EURL
F-95972 Paris

D-Sub *AWG 22-26*

female turned crimp contact

Sub.

TB09 67 000 547x

Maßstab/ *Scale* 5/1

Blatt/ *Page* 1/1