Chipsmall Limited consists of a professional team with an average of over 10 year of expertise in the distribution of electronic components. Based in Hongkong, we have already established firm and mutual-benefit business relationships with customers from,Europe,America and south Asia,supplying obsolete and hard-to-find components to meet their specific needs.

With the principle of “Quality Parts,Customers Priority,Honest Operation,and Considerate Service”,our business mainly focus on the distribution of electronic components. Line cards we deal with include Microchip,ALPS,ROHM,Xilinx,Pulse,ON,Everlight and Freescale. Main products comprise IC,Modules,Potentiometer,IC Socket,Relay,Connector.Our parts cover such applications as commercial,industrial, and automotives areas.

We are looking forward to setting up business relationship with you and hope to provide you with the best service and solution. Let us make a better world for our industry!

Contact us

Tel: +86-755-8981 8866 Fax: +86-755-8427 6832
Email & Skype: info@chipsmall.com Web: www.chipsmall.com
Address: A1208, Overseas Decoration Building, #122 Zhenhua RD., Futian, Shenzhen, China

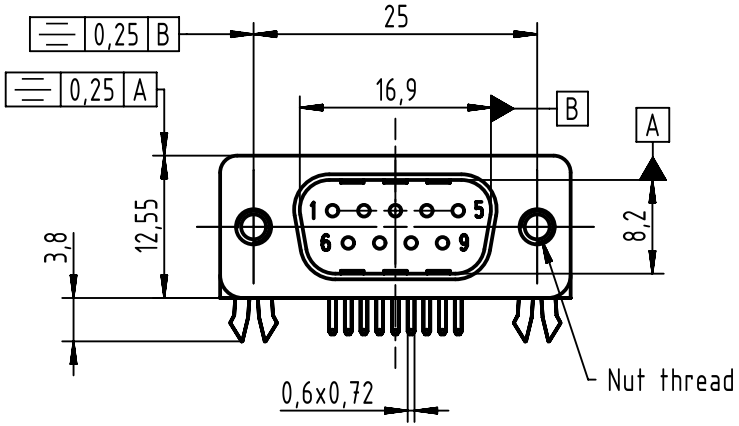

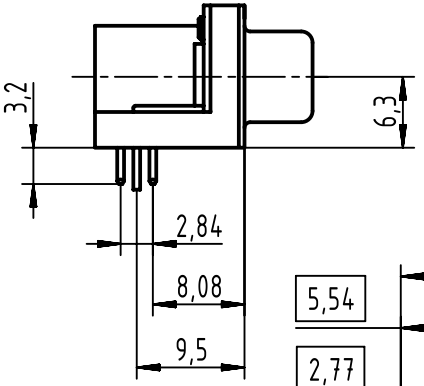

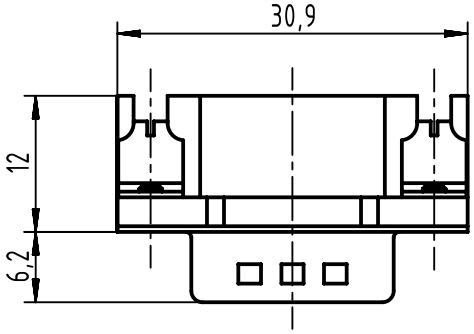

PC-Board layout
view component side
thickness 1,6mm

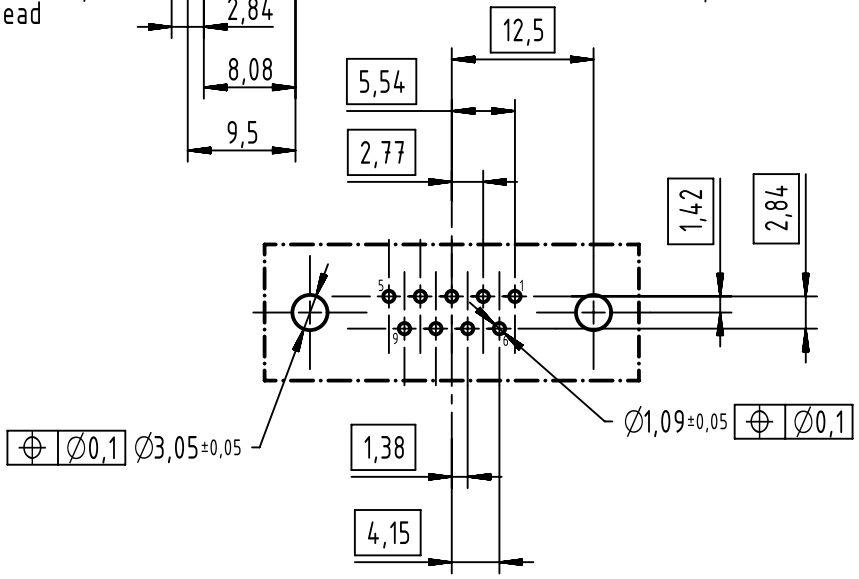

Connector insertion force on PCB = maxi 80N

Part number	Nut thread	Performance level
09681637811	M3	PL3
09681635811	M3	S4
09681637812	4-40 UNC	PL3
09681635812	4-40 UNC	S4

All Dimensions in mm
Original Size DIN A4

All rights reserved

Department EC PD - FR

HARTING Electronics GmbH
D-32339 Espelkamp

Scale	Free size tol.	Ref.
2:1		Sub.

Created by	Inspected by	Standardisation	Date	State
DOUGE	BAGDIKIAN	HOFFMANN	2013-12-10	Final Release

Title: D-Sub STD 9P male angled board locks

Doc-Key / ECM-Nr.: 100539977/UGD/001/B 500000069293

Type: TB | Number: 0968163X81X | Rev.: B | Page: 1/1

A4