Chipsmall Limited consists of a professional team with an average of over 10 year of expertise in the distribution of electronic components. Based in Hongkong, we have already established firm and mutual-benefit business relationships with customers from,Europe,America and south Asia,supplying obsolete and hard-to-find components to meet their specific needs.

With the principle of “Quality Parts,Customers Priority,Honest Operation,and Considerate Service”,our business mainly focus on the distribution of electronic components. Line cards we deal with include Microchip,ALPS,ROHM,Xilinx,Pulse,ON,Everlight and Freescale. Main products comprise IC,Modules,Potentiometer,IC Socket,Relay,Connector.Our parts cover such applications as commercial,industrial, and automotives areas.

We are looking forward to setting up business relationship with you and hope to provide you with the best service and solution. Let us make a better world for our industry!

Contact us

Tel: +86-755-8981 8866 Fax: +86-755-8427 6832
Email & Skype: info@chipsmall.com Web: www.chipsmall.com
Address: A1208, Overseas Decoration Building, #122 Zhenhua RD., Futian, Shenzhen, China

Alle Rechte vorbehalten/ *All rights reserved*

Harnessing dimensions for cables: RG174U BU, RG188AU, RG316U

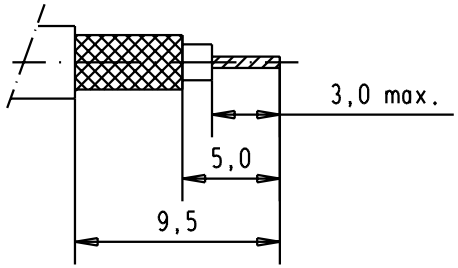

Scale 3:1

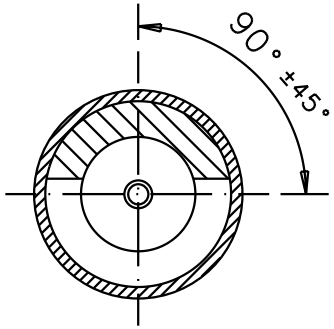

A - A
Solder pot position

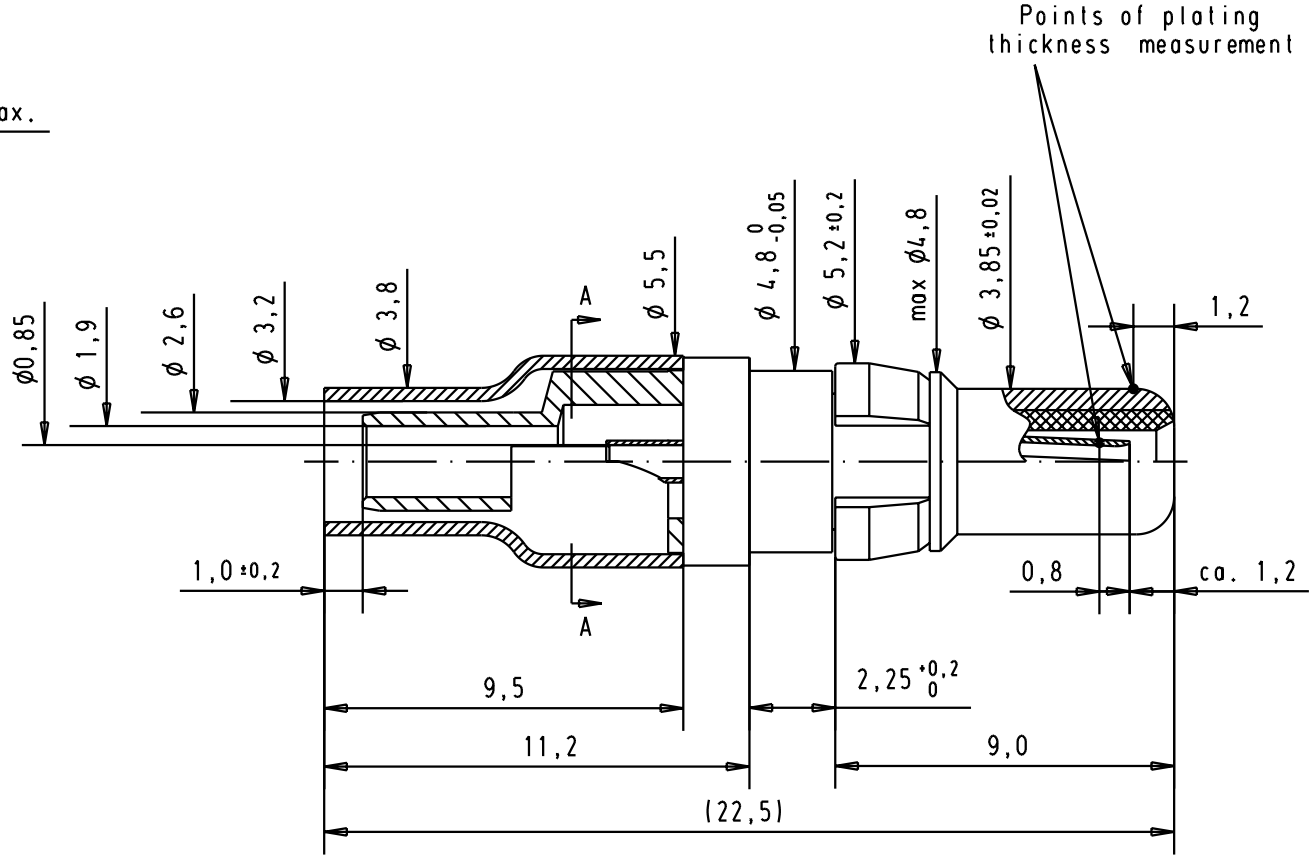

Crimping tool of outer conductor:
hand tool: 09 99 000 0503 00
die: 09 99 000 0508 00

Part number	Plating	outer conductor	inner conductor	Mod.	Dat.	Name
09692817140	Mating area	0,2 µm Au	0,2 µm Au			
	Termination area	5 µm Sn	0,2 µm Au			
09692815140	Mating area	0,8 µm Au	1,3 µm Au			
	Termination area	0,2 µm Au	1,3 µm Au	31057	21-JUN-02	CV

	Dat.	Name
Detail.	21-JUN-02	CV
Insp.		
Stand.		

All Dim. in mm
Orig. Size DIN A 4

HARTING EURL
F-95972 Paris

Male coaxial contact, 50 Ohms, straight cable terminaison
inner conductor for solder termination, outer conductor for solder or crimp termination

Maßstab/ *Scale* 5:1

TB 09 69 281 x140

Sub.

Blatt/ *Page* 1/1