Chipsmall Limited consists of a professional team with an average of over 10 year of expertise in the distribution of electronic components. Based in Hongkong, we have already established firm and mutual-benefit business relationships with customers from,Europe,America and south Asia,supplying obsolete and hard-to-find components to meet their specific needs.

With the principle of “Quality Parts,Customers Priority,Honest Operation,and Considerate Service”,our business mainly focus on the distribution of electronic components. Line cards we deal with include Microchip,ALPS,ROHM,Xilinx,Pulse,ON,Everlight and Freescale. Main products comprise IC,Modules,Potentiometer,IC Socket,Relay,Connector.Our parts cover such applications as commercial,industrial, and automotives areas.

We are looking forward to setting up business relationship with you and hope to provide you with the best service and solution. Let us make a better world for our industry!

Contact us

Tel: +86-755-8981 8866 Fax: +86-755-8427 6832
Email & Skype: info@chipsmall.com Web: www.chipsmall.com
Address: A1208, Overseas Decoration Building, #122 Zhenhua RD., Futian, Shenzhen, China

Alle Rechte vorbehalten/ All rights reserved

X
(Lochbild)
(board drillings)

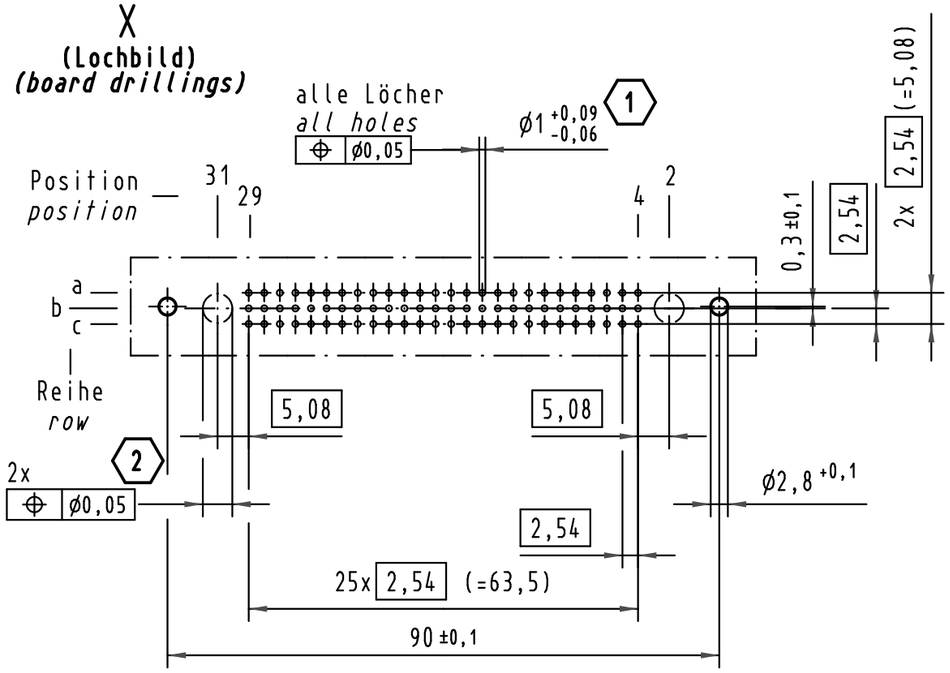

A-B
2:1

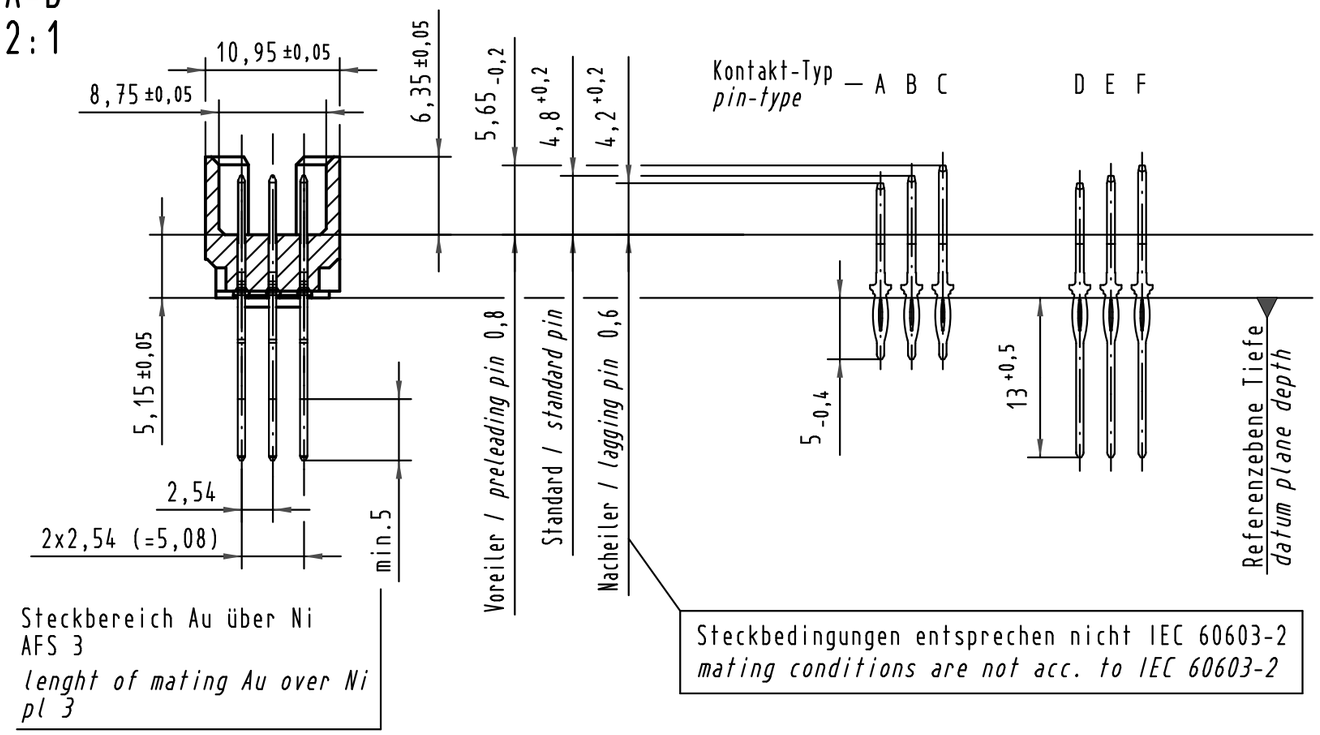

X Kontaktbelegung
contact loading

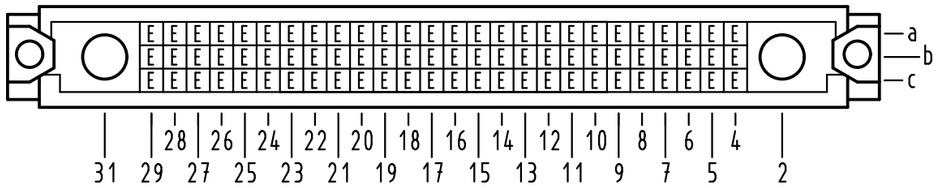

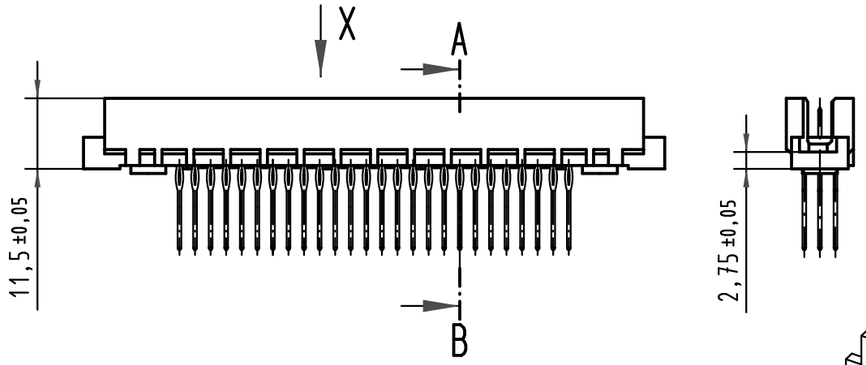

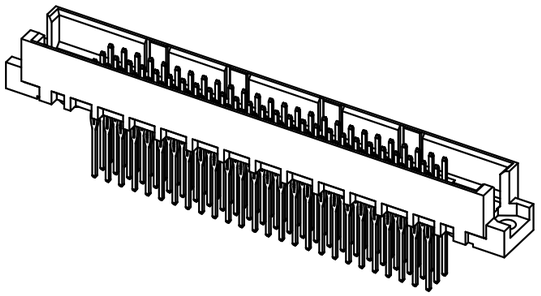

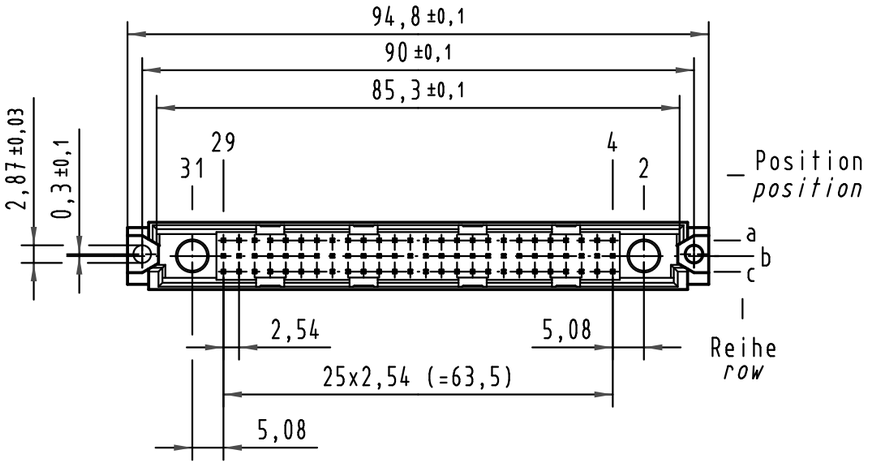

1 Für Einpreßverbindung nach IEC 60352-5
for press-in connection acc. to IEC 60352-5

2 Lochdurchmesser ist auf den jeweiligen Kontakt abzustimmen
hole diameter is to be coordinated with the respective contact

09 73 178 6974	2	Au flash over PdNi over Ni
Bestell-Nr. *part-No.*	Anforderungsstufe nach IEC *performance level acc. to IEC*	Kontaktoberfläche *contact plating*

All Dimensions in mm
Original Size DIN A 3

Techn. Character.

Nicht tolerierte Maße/ *Free size tolerances*
IEC 60603-2

	Dat.	Name
Detail.	15.02.05	Hil
Insp.	15.02.05	kfoe
Stand.		

Maßstab/*Scale* 1:1 (2:1)

type M inverse 78+2
Messerleiste Einpreß 13,0 Anschluß vergoldet
male connector press-in 13,0 termination gold-plated

35548	20.07.09	Hage.
32541		
Mod.	Dat.	Name

HARTING Electronics GmbH & Co. KG
D-32339 ESPELKAMP

TB 09 73 178 x974

Blatt/ *page*

Sub.