Chipsmall Limited consists of a professional team with an average of over 10 year of expertise in the distribution of electronic components. Based in Hongkong, we have already established firm and mutual-benefit business relationships with customers from,Europe,America and south Asia,supplying obsolete and hard-to-find components to meet their specific needs.

With the principle of “Quality Parts,Customers Priority,Honest Operation,and Considerate Service”,our business mainly focus on the distribution of electronic components. Line cards we deal with include Microchip,ALPS,ROHM,Xilinx,Pulse,ON,Everlight and Freescale. Main products comprise IC,Modules,Potentiometer,IC Socket,Relay,Connector.Our parts cover such applications as commercial,industrial, and automotives areas.

We are looking forward to setting up business relationship with you and hope to provide you with the best service and solution. Let us make a better world for our industry!

Contact us

Tel: +86-755-8981 8866 Fax: +86-755-8427 6832
Email & Skype: info@chipsmall.com Web: www.chipsmall.com
Address: A1208, Overseas Decoration Building, #122 Zhenhua RD., Futian, Shenzhen, China

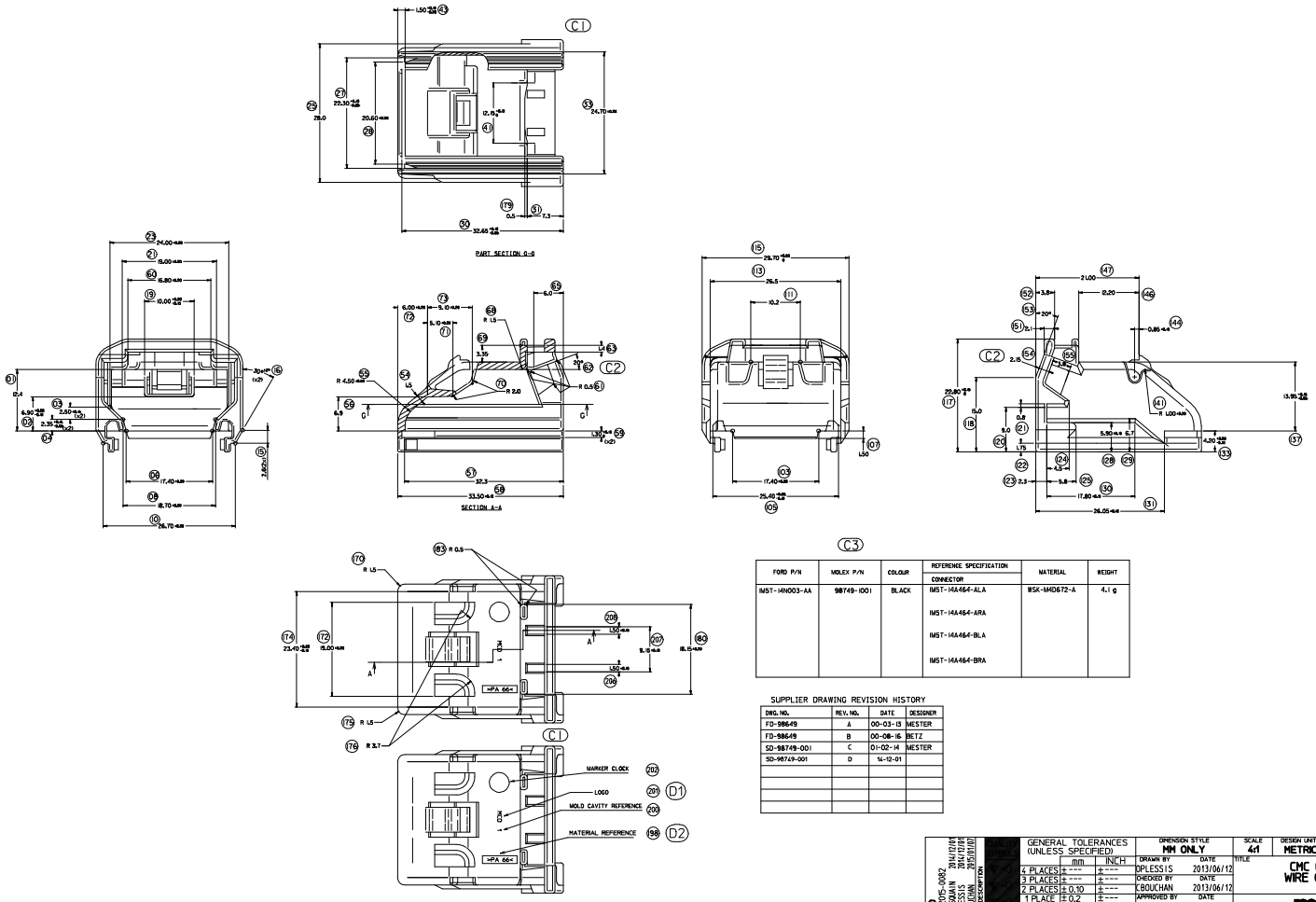

FRAMES	LTRS.	REVISIONS			
		ORIGINATOR	CHECKER	ENGR. APP.	MATL. APP.
ALL		FIRST RELEASE			
		EE00-E-111082 17-000 (P) DATE: 00.06.06 CADdn			
		NME	J. HOYER	N. SRADNIK	00.03.01 MOLEX
ALL		MOLEX PART-NO.CHANGED			
		EE00-E-111332186-000 (P) DATE: 17.08.00 CADdn			
		MBE	J. HOYER	N. SRADNIK	00.08.16 MOLEX
ALL		C1: LEVER STOP MODIFIED C2: FIXATION FOR TIE WRAP MODIFIED C3: MOLEX P/N CHANGED EE00-E-110987173-000 (P) DATE: 01.01.12 CADdn			
		N. MESTER	J. HOYER	N. SRADNICK	00.05.07 MOLEX
ALL		D1 : WAS XXIS D2 : UPDATE POSITION			
					14.12.01 MOLEX

FORD P/N	MOLEX P/N	COLOUR	REFERENCE SPECIFICATION CONNECTOR	MATERIAL	WEIGHT
IM5T-14N003-AA	98749-1001	BLACK	IM5T-14A464-ALA IM5T-14A464-ARA IM5T-14A464-BLA IM5T-14A464-BRA	WSK-M4D672-A	4.1 g

SUPPLIER DRAWING REVISION HISTORY

DRG. NO.	REV. NO.	DATE	DESIGNER
FD-98649	A	00-03-13	MESTER
FD-98649	B	00-08-16	BETZ
SD-98749-001	C	01-02-14	MESTER
SD-98749-001	D	14-12-01	

REVISED			
REV.	NO.	DATE	DESCRIPTION
D	GD15-0082	2014/12/18	
	DERNAPROSQUAIN	2014/12/18	
	CHKDLEPLESIS	2013/01/07	
	APPRLBOULAND	2013/01/07	

GENERAL TOLERANCES (UNLESS SPECIFIED)	mm	INCH
4 PLACES	± ---	± ---
3 PLACES	± ---	± ---
2 PLACES	± 0.10	± ---
1 PLACE	± 0.2	± ---
0 PLACE	± ---	± ---
ANGULAR ± 2 °		

DRAFT WHERE APPLICABLE MUST REMAIN WITHIN DIMENSIONS

DIMENSION STYLE	SCALE	DESIGN UNITS
MM ONLY	4:1	METRIC

FIRST ANGLE PROJECTION

	DRAWN BY	DATE
	DPLESSIS	2013/06/12
	CHECKED BY	DATE
	CBOUCHAN	2013/06/12
	APPROVED BY	DATE
	DPLESSIS	2013/07/01

MATERIAL NO. SEE CHART

SIZE A0

TITLE: CMC CONNECTOR WIRE CAP 32 WAY

molex

DOCUMENT NO. SD-98749-001

SHEET NO. 1 OF 1

THIS DRAWING CONTAINS INFORMATION THAT IS PROPRIETARY TO MOLEX INCORPORATED AND SHOULD NOT BE USED WITHOUT WRITTEN PERMISSION

THIS DRAWING HAS BEEN PREPARED BY OR ON BEHALF OF FORD MOTOR COMPANY. FORD RETAINS ALL COMMON LAW, STATUTORY AND OTHER RESERVED RIGHTS, INCLUDING COPYRIGHTS. THIS DRAWING SHALL NOT BE USED FOR ANY PURPOSE OTHER THAN PERFORMING SERVICES DIRECTLY OR INDIRECTLY FOR FORD WITHOUT WRITTEN PERMISSION. WITHOUT PERMISSION OF FORD, UNAUTHORIZED USE, COPYING OR MODIFICATION, INCLUDING THE REMOVAL OF THIS NOTE, MAY CONSTITUTE A VIOLATION OF CIVIL OR CRIMINAL LAWS ENFORCEABLE BY FORD OR GOVERNMENTAL AGENCIES.

COPYRIGHT © FORD MOTOR COMPANY (YEAR AS INITIAL RELEASED)

FOR INFORMATION CONTACT: MOLEX, INC

REFERENCE SUPPLIER CODE: N1GHA

PART MUST COMPLY WITH MATERIAL SPEC. MSS-MPBP0008-A1 TO HELP SAFEGUARD HEALTH, SAFETY AND THE ENVIRONMENT.

DRAFTED IN ACCORDANCE WITH FAO ENGINEERING DRAFTING STANDARD CURRENT AT INITIAL RELEASE

3rd ANGLE PROJ. DIMENSIONS IN MILLIMETERS

CAD TYPE	CAD LOC.	CAD FILE	
		FD98649	IS MASTER

OPER. NO.	UNIT	DRAWING
		IM5T-14N003-AA

DESIGN	DETAIL	TITLE	SHT: 1 OF 1
IM5T-14N003-AA	CHECKED	SAFETY	CVR-WIR CONN ICMC CONN 32 WAY WIRE DRESS COVER)
TEILNUMMER PART NR.	SCALE 4/1	DATE	DIVISION PLANT

Ib_frame_A0_P_M_F
Rev. G 2012/01/11

IM5T-14N003-AA	C	FRAME 1 OF 1