Chipsmall Limited consists of a professional team with an average of over 10 year of expertise in the distribution of electronic components. Based in Hongkong, we have already established firm and mutual-benefit business relationships with customers from,Europe,America and south Asia,supplying obsolete and hard-to-find components to meet their specific needs.

With the principle of “Quality Parts,Customers Priority,Honest Operation,and Considerate Service”,our business mainly focus on the distribution of electronic components. Line cards we deal with include Microchip,ALPS,ROHM,Xilinx,Pulse,ON,Everlight and Freescale. Main products comprise IC,Modules,Potentiometer,IC Socket,Relay,Connector.Our parts cover such applications as commercial,industrial, and automotives areas.

We are looking forward to setting up business relationship with you and hope to provide you with the best service and solution. Let us make a better world for our industry!

Contact us

Tel: +86-755-8981 8866 Fax: +86-755-8427 6832
Email & Skype: info@chipsmall.com Web: www.chipsmall.com
Address: A1208, Overseas Decoration Building, #122 Zhenhua RD., Futian, Shenzhen, China

CODING

FRONT VIEW
HOUSING
2:1

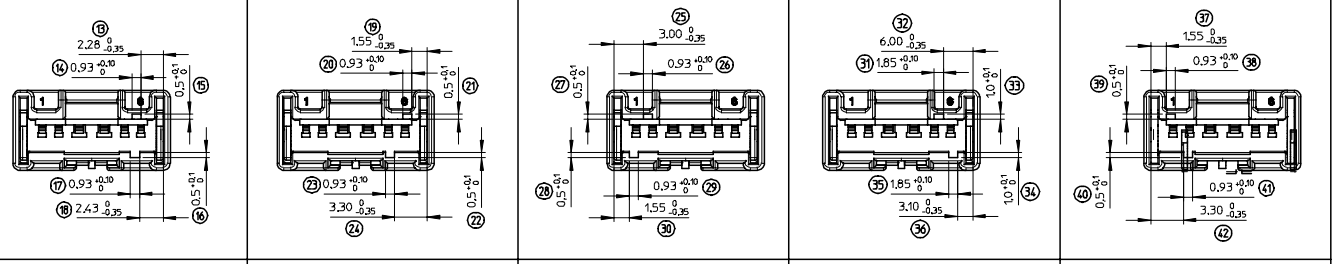

Material number Assy product	0988251069	0988251065	0988251068	0988251061	0988251060
COLOR	BROWN	GREEN	GREY	BLACK	WHITE

MODIFICATIONS

REV.	DESCRIPTIONS	NAME	DATE
A	RELEASED	PBO	07/10/19

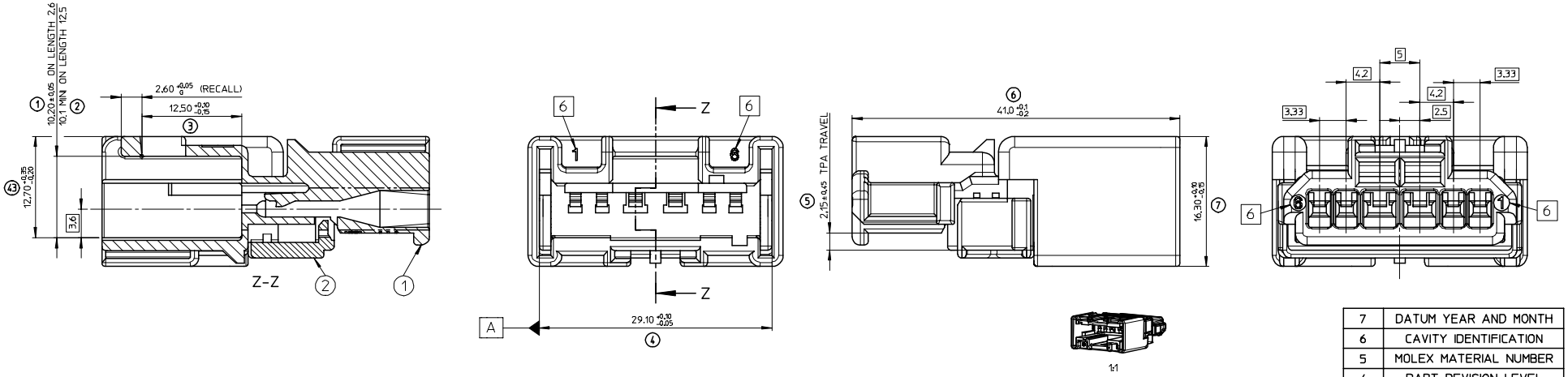

7	DATUM YEAR AND MONTH
6	CAVITY IDENTIFICATION
5	MOLEX MATERIAL NUMBER
4	PART REVISION LEVEL
3	STAMP IDENTIFICATION
2	MATERIAL CODE
1	ENGINEERING CONTROL ID
ID.	MARKING

NOTES :
1 - USE 1.5 MALE TERMINALS SICMA
2 - USE 2.8 MALE TERMINALS SICMA
3 - MATES WITH 098821106X
4 - APPLICATION SPECIFICATION : AS-98821-001
5 - MATERIALS : SEE CHART, INFLAMMABILITY LEVEL UL94-HB

ID.	QTY	DESIGNATION	Material Number of each component	COLOR	MATERIAL
2	1	PIN CONN TPA HYBRID 6CKT	0988250166	BLUE	PA6.6-GF20
1	1	PIN CONN HYBRID UNSEALED 6CKT	0988250060	WHITE	PBT
			0988250061	BLACK	
			0988250065	GREEN	
			0988250068	GREY	
			0988250069	BROWN	

WITHOUT TPA

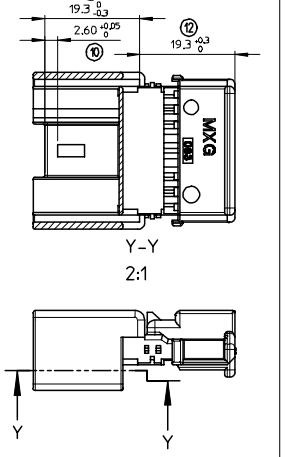

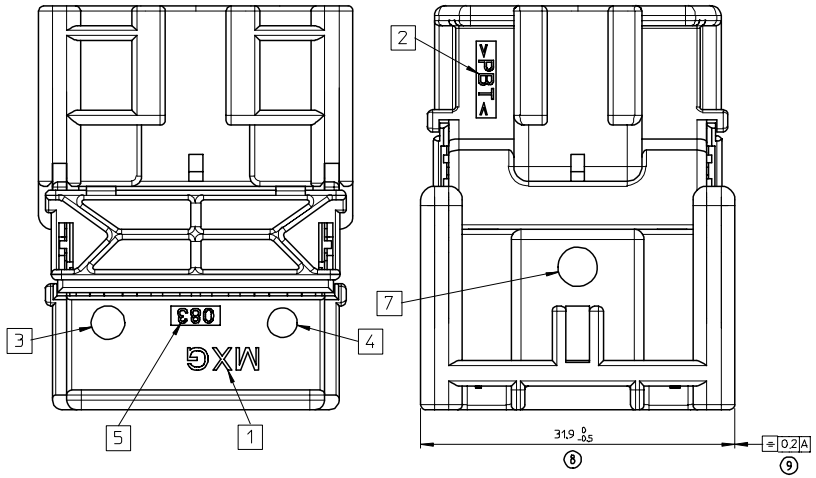

CODING SHOWN : 0988251061 BLACK

ENTER DESCRIPTION
EC NO: G2008-0186 2007/11/26
DRWN:PBOSQUAIN 2007/12/03
CHKD:JDUCLOS 2007/12/03
APPR:LSTICKEIR 2007/12/03
DESCRIPTION
REV A

QUALITY SYMBOLS

GENERAL TOLERANCES (UNLESS SPECIFIED)

	mm	INCH
4 PLACES	± ---	± ---
3 PLACES	± ---	± ---
2 PLACES	± 0.05	± ---
1 PLACE	± 0.1	± ---
ANGULAR ± 2 °		

DRAFT WHERE APPLICABLE MUST REMAIN WITHIN DIMENSIONS

DIMENSION STYLE: MM ONLY
SCALE: 4:1
DESIGN UNITS: METRIC
FIRST ANGLE PROJECTION

DRAWN BY: PBOSQUAIN DATE: 2007/10/19
CHECKED BY: JDUCLOS DATE: 2007/10/19
APPROVED BY: LSTICKEIR DATE: 2007/10/19

TITLE: NSCC PIN CONN HYBRID UNSEALED 6CKT

MOLEX INCORPORATED

MATERIAL NO.: SEE CHART
DOCUMENT NO.: SD-98825-002
SHEET NO.: 1 OF 1
SIZE: A1

THIS DRAWING CONTAINS INFORMATION THAT IS PROPRIETARY TO MOLEX INCORPORATED AND SHOULD NOT BE USED WITHOUT WRITTEN PERMISSION