Chipsmall Limited consists of a professional team with an average of over 10 year of expertise in the distribution of electronic components. Based in Hongkong, we have already established firm and mutual-benefit business relationships with customers from,Europe,America and south Asia,supplying obsolete and hard-to-find components to meet their specific needs.

With the principle of “Quality Parts,Customers Priority,Honest Operation,and Considerate Service”,our business mainly focus on the distribution of electronic components. Line cards we deal with include Microchip,ALPS,ROHM,Xilinx,Pulse,ON,Everlight and Freescale. Main products comprise IC,Modules,Potentiometer,IC Socket,Relay,Connector.Our parts cover such applications as commercial,industrial, and automotives areas.

We are looking forward to setting up business relationship with you and hope to provide you with the best service and solution. Let us make a better world for our industry!

Contact us

Tel: +86-755-8981 8866 Fax: +86-755-8427 6832
Email & Skype: info@chipsmall.com Web: www.chipsmall.com
Address: A1208, Overseas Decoration Building, #122 Zhenhua RD., Futian, Shenzhen, China

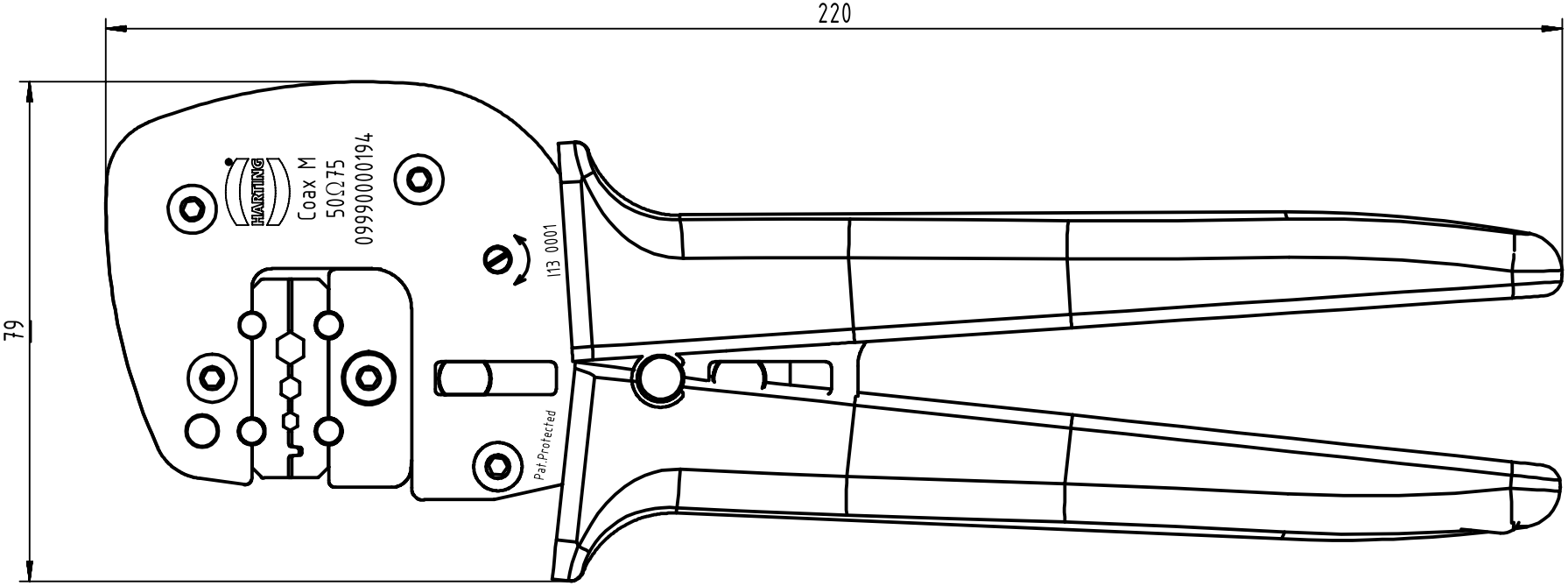

Linearer Hub
Straight action principle

Entriegelbare Zwangssperre
Ratchet release

Einfache Druckjustage mit Zahnarretierung
Simple pressure adjustment with locking device

Kunststoffgriffe, Farbe: signalgelb
grips, colour: yellow

Gewicht ca. 650 g
Weight approx. 650 g

Anwendungsbereich: KOAX-Steckverbinder
Application range: coax-connector

Sechskant
hexagon

Profil 1: SW/AF 2.67x8 mm
Profil 2: SW/AF 3.25x8 mm
Profil 3: SW/AF 4.52x8 mm

All Dimensions in mm Original Size DIN A4	Scale 1:1	Free size tol.		Ref. Sub. TB 09 99 000 0194 Mod. 29856	
HARTING All rights reserved Department EC PD - DE	Created by WAERMKER	Inspected by HAERTLING	Standardisation HOFFMANN	Date 2014-01-28	State Final Release
HARTING Electronics GmbH D-32339 Espelkamp	Title GDS-A-M CRIMPING TOOLS				Doc-Key / ECM-Nr. 100073568/UGD/001/B 500000071042
	Type TB	Number 09990000194		Rev. B	Page 1/1

A4