Chipsmall Limited consists of a professional team with an average of over 10 year of expertise in the distribution of electronic components. Based in Hongkong, we have already established firm and mutual-benefit business relationships with customers from,Europe,America and south Asia,supplying obsolete and hard-to-find components to meet their specific needs.

With the principle of “Quality Parts,Customers Priority,Honest Operation,and Considerate Service”,our business mainly focus on the distribution of electronic components. Line cards we deal with include Microchip,ALPS,ROHM,Xilinx,Pulse,ON,Everlight and Freescale. Main products comprise IC,Modules,Potentiometer,IC Socket,Relay,Connector.Our parts cover such applications as commercial,industrial, and automotives areas.

We are looking forward to setting up business relationship with you and hope to provide you with the best service and solution. Let us make a better world for our industry!

Contact us

Tel: +86-755-8981 8866 Fax: +86-755-8427 6832
Email & Skype: info@chipsmall.com Web: www.chipsmall.com
Address: A1208, Overseas Decoration Building, #122 Zhenhua RD., Futian, Shenzhen, China

Alle Rechte vorbehalten/ *All rights reserved*

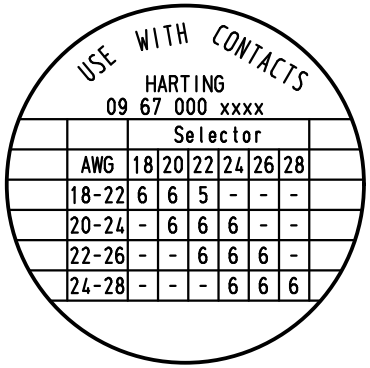

	Selector					
AWG	18	20	22	24	26	28
18-22	6	6	5	-	-	-
20-24	-	6	6	6	-	-
22-26	-	-	6	6	6	-
24-28	-	-	-	6	6	6

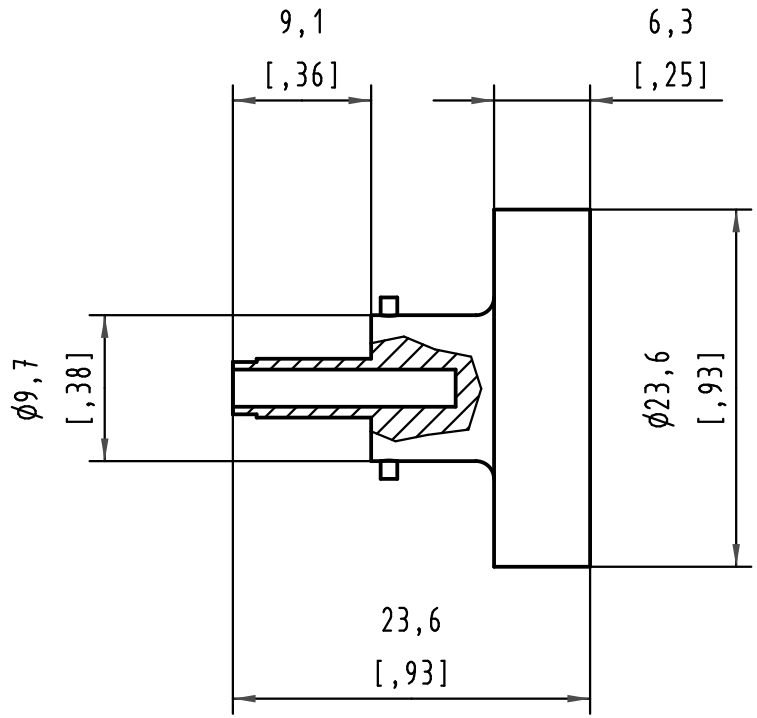

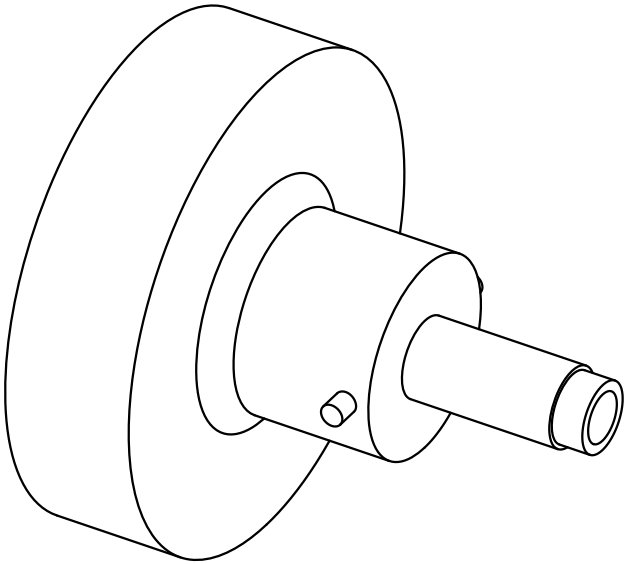

Positionierhülse für Handcrimpzange 09 99 000 0501

Positioner for hand crimp tool 09 99 000 0501

All Dimensions in mm
Original Size DIN A 4

Techn. Character.

Nicht tolerierte Maße/ *Free size tolerances*

	Dat.	Name	Maßstab/*Scale*
Detail.	29apr2010	LP	2:1
Insp.			
Stand.			

Positionierhülse
Positioner
D-Sub signal contact

Mod.	Dat.	Name
EC01739	29apr2010	LP

HARTING Electronics GmbH & Co. KG
D-32339 ESPELKAMP

TB 09 99 000 0531

Sub.

Blatt/ *page*