Chipsmall Limited consists of a professional team with an average of over 10 year of expertise in the distribution of electronic components. Based in Hongkong, we have already established firm and mutual-benefit business relationships with customers from,Europe,America and south Asia,supplying obsolete and hard-to-find components to meet their specific needs.

With the principle of “Quality Parts,Customers Priority,Honest Operation,and Considerate Service”,our business mainly focus on the distribution of electronic components. Line cards we deal with include Microchip,ALPS,ROHM,Xilinx,Pulse,ON,Everlight and Freescale. Main products comprise IC,Modules,Potentiometer,IC Socket,Relay,Connector.Our parts cover such applications as commercial,industrial, and automotives areas.

We are looking forward to setting up business relationship with you and hope to provide you with the best service and solution. Let us make a better world for our industry!

Contact us

Tel: +86-755-8981 8866 Fax: +86-755-8427 6832
Email & Skype: info@chipsmall.com Web: www.chipsmall.com
Address: A1208, Overseas Decoration Building, #122 Zhenhua RD., Futian, Shenzhen, China

PART NUMBER	"A"	"B"	"C"	"D"	LEAD "A" COLOR	LEAD "B" COLOR
OFHM0001ZXJ	94±5 [3.70±0.2]	94±5 [3.70±0.2]	13±2 [.51±0.08]	13±2 [.51±0.08]	BLACK	BLACK

LTR	DATE	REVISION	CHK	APD
A	03/29/07	63207 - RELEASE BRK		
B	06/06/07	85498D - CHG TOL FROM ±1 TO ±1.5, CHG NOTE 6 BRK		
C	07/24/07	85549D- CHG TO CHARTED DRAWING, HOUSING HEIGHT TO 18.0 AND STRIP TOLERANCE TO ±2, BRK		

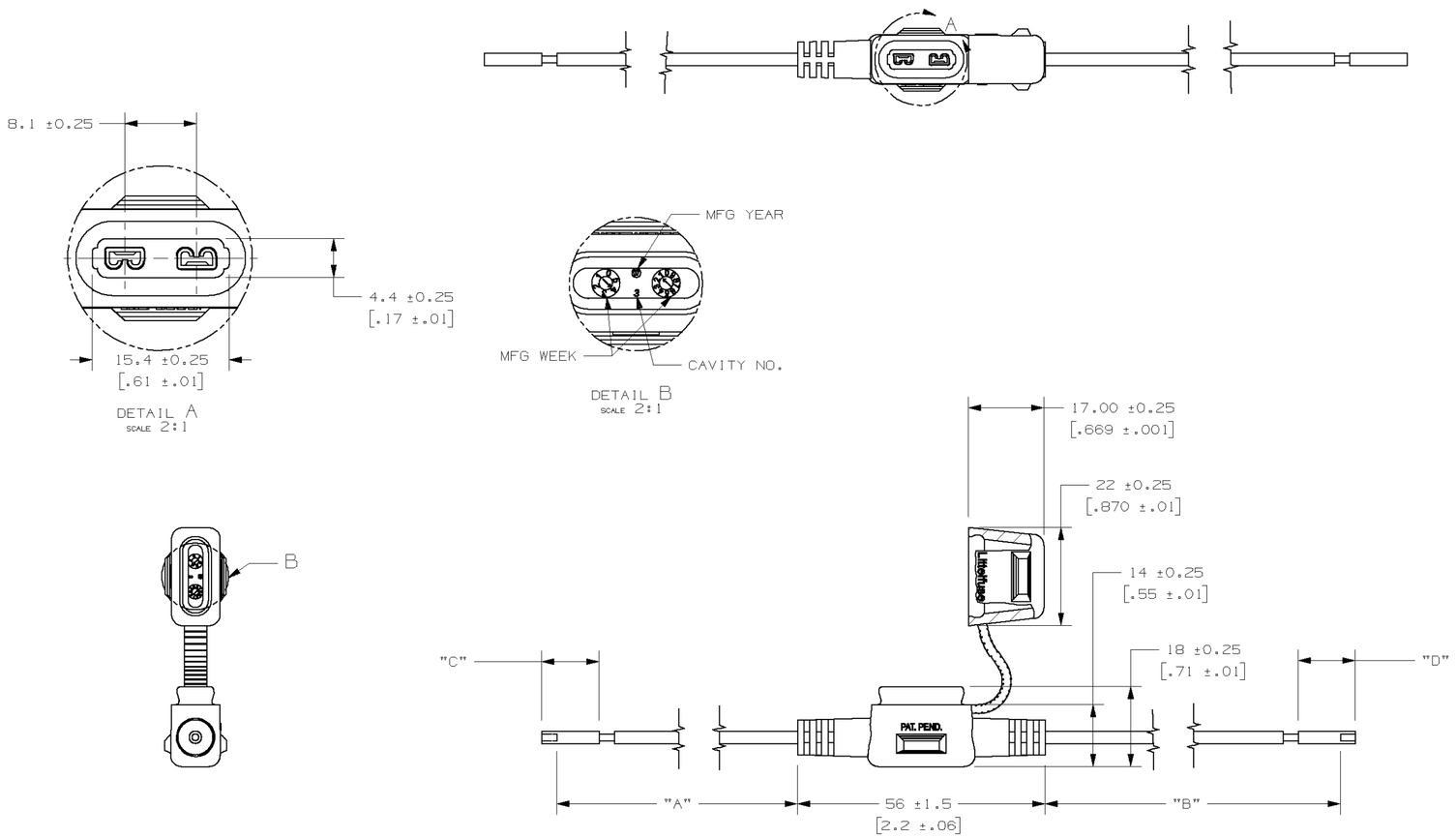

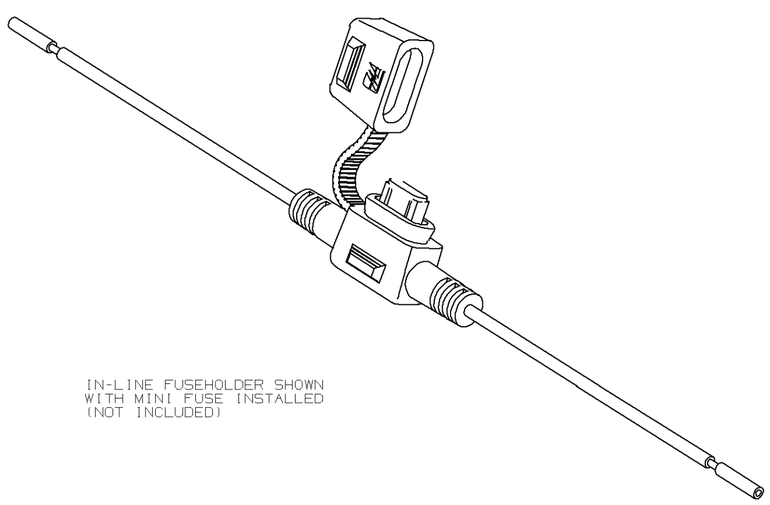

IN-LINE FUSEHOLDER SHOWN
WITH MINI FUSE INSTALLED
(NOT INCLUDED)

NOTES:
1. HOLDER MATERIAL: BLACK TPV 251 80W 232
2. CONTACTS: C194 COPPER ALLOY: TIN-PLATED
3. WIRE: BLACK, 14 AWG STRANDED COPPER, 125°C RATED, GXL WIRE
4. CRIMP: MUST MEET SAE/USCAR 21 STANDARD
5. RATING: MAX. 20A, 32Vdc
6. FUSEHOLDERS SHOULD NOT BE PLACED UNDER TENSION IN FINAL APPLICATION
7. MAX TEMPERATURE 125°C

METRIC

UNLESS OTHERWISE SPECIFIED, DIMENSIONS ARE IN MILLIMETERS.
DIMENSIONS IN BRACKETS [ ] ARE INCHES

UNLESS OTHERWISE SPECIFIED, DIMENSIONS DO NOT INCLUDE PLATING.

◎	DENOTES CRITICAL CHARACTERISTICS.
CPK	DENOTES CPK DIMENSIONS, -MINIMUM CPK VALUE
⟨ST⟩	DENOTES A CHARACTERISTIC THAT PROVIDES AN INDICATION OF PROCESS PERFORMANCE. PROCEDURE FOR MEASUREMENT AND TRACKING TO BE DEFINED IN LITTELFUSE INSPECTION INSTRUCTIONS
CP	DENOTES CP DIMENSIONS, -MINIMUM CP VALUE MUST BE WITHIN THE DIMENSIONAL LIMITATIONS SHOWN ON DRAWING AND INITIALLY LOCATED TO ALLOW FOR MAXIMUM TOOL LIFE

COPIES TO

1	9	18
2	10	19
3	12	20
4	13	21
5	14	23
6	15	33
7	16	43
8	17	53

MATL SPEC: SEE NOTES		
FINISH: SEE NOTES		
DRW: BRK	DATE: 03/29/07	SCALE: 1:1
CHK	DATE	SUPER DR
APPD	DATE	FINSH GOOD WT GRAMS/PIECE

TOLERANCE UNLESS OTHERWISE SPECIFIED
ONE PLACE DEC +/-.3
TWO PLACE DEC +/-.15
THREE PLACE DEC +/-.100
ANGULAR +/-1°

3RD ANGLE PROJECTION

TITLE: MINI IN-LINE FUSEHOLDER

Littelfuse®
DES PLAINES, ILLINOIS 60016

REVISION: C
DRWG. NO. OFHM0001ZXJ
OUTLINE

CAD GENERATED DRAWING - NO PENCIL CHANGES ALLOWED