Chipsmall Limited consists of a professional team with an average of over 10 year of expertise in the distribution of electronic components. Based in Hongkong, we have already established firm and mutual-benefit business relationships with customers from,Europe,America and south Asia,supplying obsolete and hard-to-find components to meet their specific needs.

With the principle of “Quality Parts,Customers Priority,Honest Operation,and Considerate Service”,our business mainly focus on the distribution of electronic components. Line cards we deal with include Microchip,ALPS,ROHM,Xilinx,Pulse,ON,Everlight and Freescale. Main products comprise IC,Modules,Potentiometer,IC Socket,Relay,Connector.Our parts cover such applications as commercial,industrial, and automotives areas.

We are looking forward to setting up business relationship with you and hope to provide you with the best service and solution. Let us make a better world for our industry!

Contact us

Tel: +86-755-8981 8866 Fax: +86-755-8427 6832
Email & Skype: info@chipsmall.com Web: www.chipsmall.com
Address: A1208, Overseas Decoration Building, #122 Zhenhua RD., Futian, Shenzhen, China

THIS DRAWING IS UNPUBLISHED. RELEASED FOR PUBLICATION -,- .
© COPYRIGHT - BY TYCO ELECTRONICS CORPORATION. ALL INTERNATIONAL RIGHTS RESERVED.

LOC	DIST
H	—

REVISIONS

P	LTR	DESCRIPTION	DATE	DWN	APVD
	L3	REV PER ECO-10-001916	02FEB2010	JY	SY
	M	ECR-10-018652	10SEP10	SW	MQW
	N	ECR-12-009867	6NOV12	SY	AC

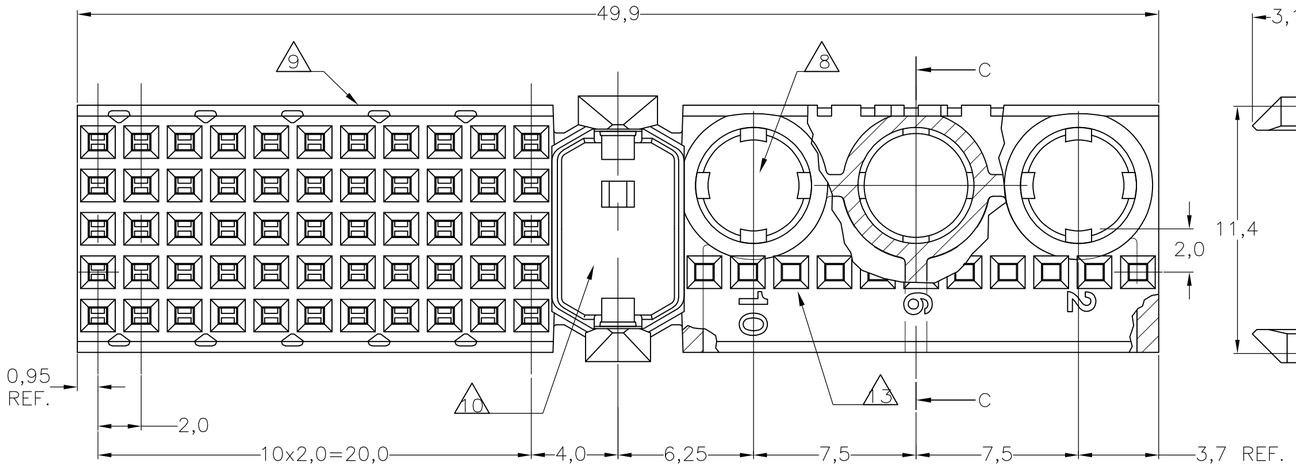

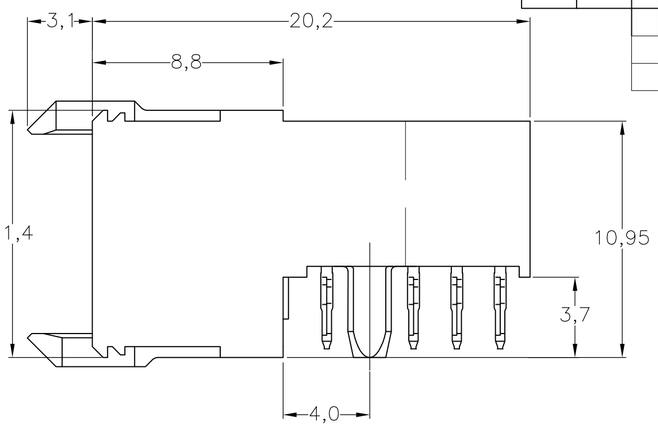

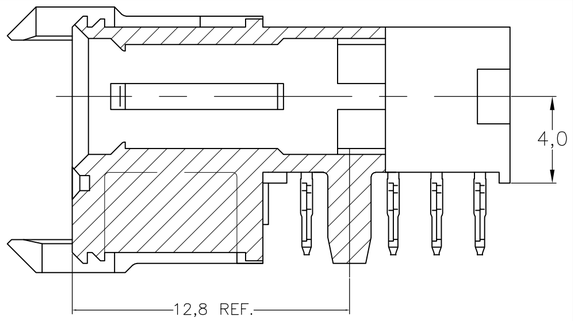

SECTION C–C

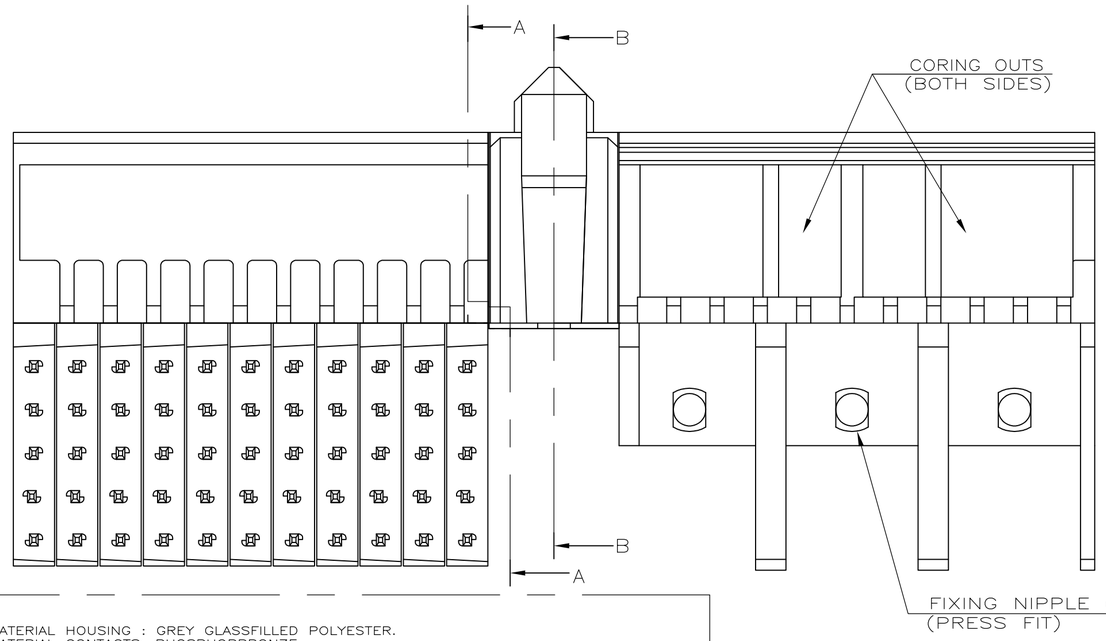

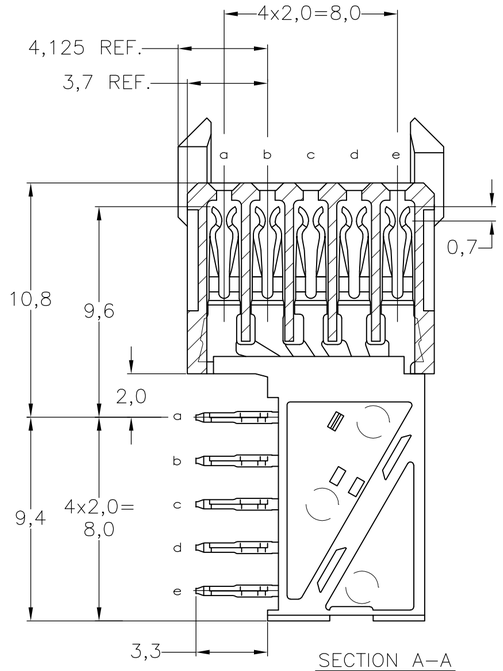

SECTION A–A

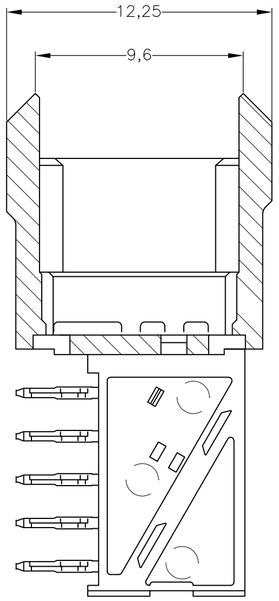

SECTION B–B

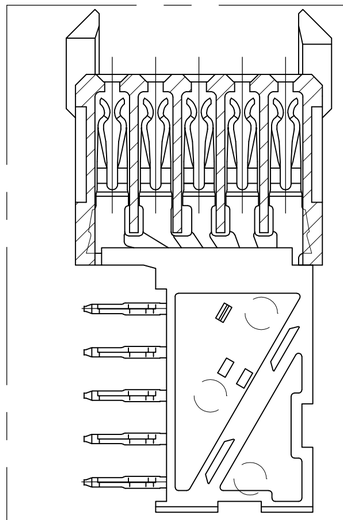

SECTION A–A 16

100750

NOTES:

1. MATERIAL HOUSING : GREY GLASSFILLED POLYESTER.
   MATERIAL CONTACTS: PHOSPHORBRONZE.
2. GENERAL PLATING SPECIFICATION: UNDERPLATING (ENTIRE CONTACT): 1,27µm NICKEL MIN. AND ACTION PIN: 0,5µm TIN–LEAD MIN. FOR PLATING OF MATING SURFACES SEE APPLICABLE SPECIFICATION REFERENCE FOR EACH DASH NUMBER.
3. CONFORMS TO ALL TESTING ACCORDING IEC 61076–4–101 PERFORMANCE LEVEL 2.
4. CONFORMS TO ALL TESTING ACCORDING IEC 61076–4–101 PERFORMANCE LEVEL 1.
5. CONNECTOR TESTED AND QUALIFIED AGAINST TELCORDIA GR–1217–CORE QUALITY LEVEL III, CENTRAL OFFICE APPLICATIONS.
6. CONNECTOR TESTED AND QUALIFIED AGAINST TELCORDIA GR–1217–CORE QUALITY LEVEL III, UNCONTROLLED ENVIRONMENT APPLICATIONS.
7. CONNECTOR LUBRICATED WITH TELCORDIA GR–1217–CORE APPROVED LUBRICANT.
8. CONTACT CAVITIES (3x) SUITABLE FOR 4,8 DIA. HIGH CURRENT, HIGH FREQUENCY OR FIBRE OPTIC CONTACTS AS PER DIN 41626 (SEE ALSO NOTE 12).
9. CONNECTOR PRINTED WITH PARTNUMBER AND DATECODE. THE MARKING CAN APPEAR ON THE FRONT SIDE OR ON THE BACK SIDE.
10. AREA RESERVED FOR KEYING PART, BASIC P/N 100526.
11. PLATED–THROUGH HOLES AT 2x2mm SQUARE GRID (55 HOLES).
12. 1,3 DIA. PLATED–THROUGH HOLES (15x) CAN BE OMITTED IF SPECIAL CONTACTS WITH CABLE CONNECTION OR FIBRE OPTIC CONTACTS ARE USED.
13. THIS ROW OF 11 CAVITIES (B1 TO B11) FOR CONNECTOR ASSEMBLY PURPOSE ONLY.
14. NOT PLATED–THROUGH HOLES (3x).
15. FITS WITH INTEGRATED GROUND RETURN UPPERSHIELD, BASIC P.N. 352111 AND INTEGRATED GROUND RETURN LOWERSHIELD, BASIC P.N. 352112
16. CONNECTOR ASSEMBLED WITH REDESIGNED CONTACTS. CONTACTS HAVE A CORING–OUT IN THE PLASTIC.
17. OBSOLETE PARTS: OBSOLETE CIS STREAMLINING PER D.RENAUD/D.SINISI
18. 0.76µm MIN GOLD PLATING AT MATING SURFACES.

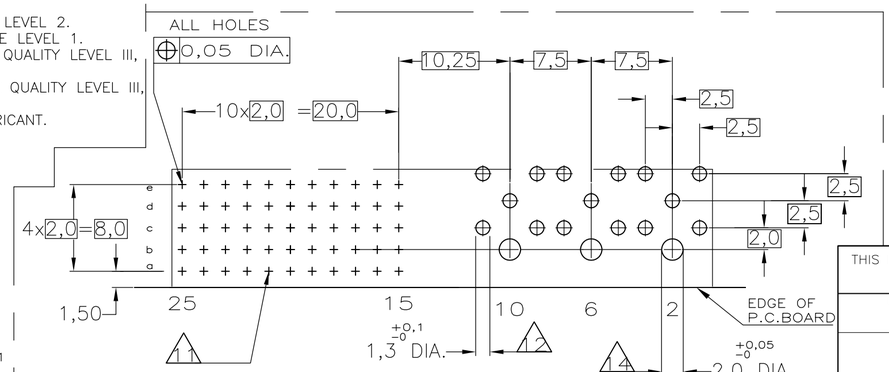

RECOMMENDED PCB–HOLE LAY–OUT
COMPONENT SIDE

P.C.B. HOLE DIM. ACTION PIN
FOR DETAILS SEE APPLICATION SPECIFICATION

	2 3 18	1	3–100750–0 16
	2 6 7	1	1–100750–9 16
OBSOLETE	2 5 7	1	~~100750–9~~ 16
OBSOLETE	2 4	1	~~100750–4~~ 16
OBSOLETE	2 3	1	~~100750–1~~ 16
	FINISH	MATERIAL	PARTNUMBER

17

THIS DRAWING IS A CONTROLLED DOCUMENT.

DIMENSIONS: mm

TOLERANCES UNLESS OTHERWISE SPECIFIED: 0 PLC ± – ; 1 PLC ± – ; 2 PLC ± – ; 3 PLC ± – ; 4 PLC ± – ; ANGLES ± – ; ±0.2

MATERIAL –

FINISH –

DWN	D.TRUREN	20JAN97
CHK	W.V.D.HEIJDEN	20JAN97
APVD	B. MOOIJ	–
PRODUCT SPEC	108–19082	
APPLICATION SPEC	114–19029	
WEIGHT	–	

Tyco Electronics — Tyco Electronics Corporation, Harrisbur, PA 17105–3608

NAME: Z–PACK 2MM HM TYPE M FEMALE CONNECTOR

SIZE	CAGE CODE	DRAWING NO	RESTRICTED TO
A2	00779	C–100750	–

CUSTOMER DRAWING | SCALE NTS | SHEET 1 OF 1 | REV N

1471–9 (1/08)