Chipsmall Limited consists of a professional team with an average of over 10 year of expertise in the distribution of electronic components. Based in Hongkong, we have already established firm and mutual-benefit business relationships with customers from,Europe,America and south Asia,supplying obsolete and hard-to-find components to meet their specific needs.

With the principle of “Quality Parts,Customers Priority,Honest Operation,and Considerate Service”,our business mainly focus on the distribution of electronic components. Line cards we deal with include Microchip,ALPS,ROHM,Xilinx,Pulse,ON,Everlight and Freescale. Main products comprise IC,Modules,Potentiometer,IC Socket,Relay,Connector.Our parts cover such applications as commercial,industrial, and automotives areas.

We are looking forward to setting up business relationship with you and hope to provide you with the best service and solution. Let us make a better world for our industry!

Contact us

Tel: +86-755-8981 8866 Fax: +86-755-8427 6832
Email & Skype: info@chipsmall.com Web: www.chipsmall.com
Address: A1208, Overseas Decoration Building, #122 Zhenhua RD., Futian, Shenzhen, China

THIS DRAWING IS UNPUBLISHED. RELEASED FOR PUBLICATION -,- .
© COPYRIGHT - By - ALL RIGHTS RESERVED.

MATED WITH: PASSEND ZU: HA 16

LOC	DIST	REVISIONS					
—	—	P	LTR	DESCRIPTION	DATE	DWN	APVD
PROJEKT NR.: —			D3	REVISED PER ECO-11-005150	21MAR11	RK	HMR

SCREW TERMINATION

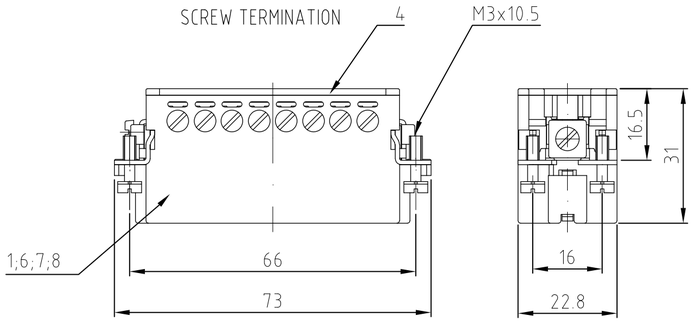

CRIMP TERMINATION

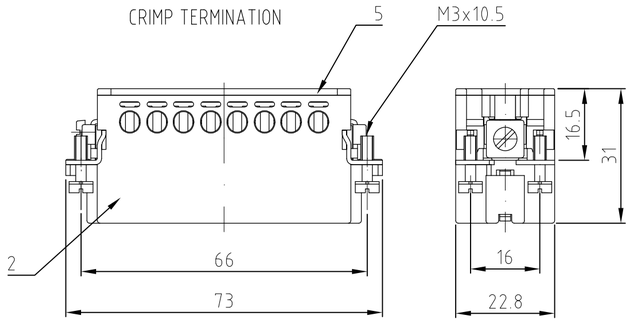

SPRING CLAMP TERMINATION

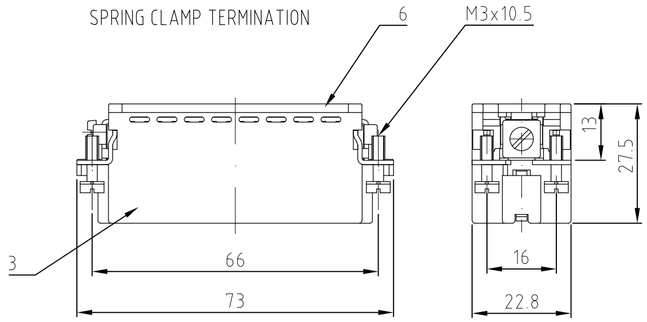

Contact arrangement / view from termination side

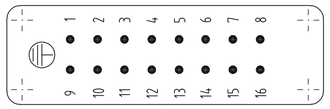

Contact arrangement / view from termination side

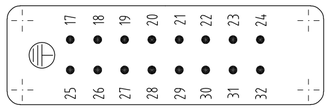

Contact arrangement / view from termination side

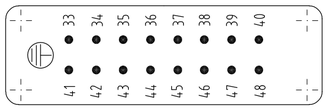

Contact arrangement / view from termination side

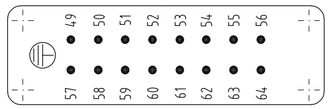

Panel cut-out for contact insert

when used without housing

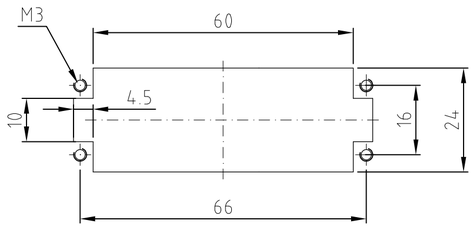

Assembling instruction

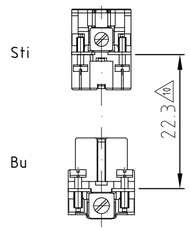

10 DISTANCE FOR SAFETY CONTACT MARKING MAX. 24 mm

NOTES:

1 SUITABLE CRIMP CONTACTS: SERIES HE/HA
OUTER DIMENSIONS OF INSULATION: MAX. Ø3,2 MM

2 SUITABLE HOOD SIZE 5; 7; 9; 11: SERIES HA; HD
SUITABLE INSERTION AND EXTRACTION TOOL:
SCREWDRIVER 0,5x3 DIN 5264

3 Strip lenght: Screw conection 10mm
Spring clamp conection 10mm Crimp conection 7.5mm

4 STANDARDS:
DIN EN 61984; DIN EN 60664-1

5 PACKAGING:
10 SETS IN A CARTON, PRE-MOUNTED

6 SPECIAL PACKAGING: Krauss-Maffei
PACKAGING UNIT: 300 PIECES

7 SPECIAL PACKAGING: Krauss-Maffei
PACKAGING UNIT: 150 PIECES

8 SPECIAL PACKAGING: AIS
PACKAGING UNIT: 250 PIECES

9 SPECIAL PACKAGING: WIELAND
PACKAGING UNIT: 100 PIECES

SEE TE CONNECTIVITY QUALITYMANAGEMENT PROCEDURE NO. 1.12

	1-3	1-2	1-0	0-4	0-7	0-6	0-5	2-9	1-9	7-9	7-8	1-8	2-8	1-7	7-7	2-7	7-1	2-3	1-1	DESCRIPTION / BENENNUNG	MATERIAL	COLOR / FARBE	ITEM NO. POS.	REMARKS / BEMERKUNGEN
					OBSOLETE																			
					1															Pin insert screw	PBT	light beige	8	with stainless steel-fixing screw
						1														Pin insert screw	PBT	light beige	7	with stainless steel-fixing screw
							1													Pin insert screw	PBT	light beige	6	with AU contact
										1	1				1		1			Cover	PBT	light beige	5	
								1					1			1		1		Cover	PBT	light beige	4	
1	1	1	1	1	1	1			1			1		1					1	Cover	PBT	light beige	3	
										1	1				1		1			pin insert spring clamp	PBT	light beige	2	
1	1	1	1					1	1			1	1	1		1		1	1	pin insert crimp/screw	PBT	light beige	1	
	9	8	7	6	5	5	5	5	5	5	5	5	5	5	5	5	5	5	5	ORDERING TEXT / BESTELLTEXT				
	HA.16.Sti.S.B1-16.WIE	HA.16.Sti.S.B1-16.AIS	HA.16.Sti.S.B17-32.KM	HA.16.Sti.S.B1-16.KM	HA.16.Sti.S-VA.B1-16	HA.16.Sti.S-VA.B17-32	HA.16.Sti.S-AU.B1-16	HA.16.Sti.C.B 49-64	HA.16.Sti.S.B 49-64	HA.16.Sti.SC.B 49-64	HA.16.Sti.SC.B 33-48	HA.16.Sti.S.B 33-48	HA.16.Sti.C.B 33-48	HA.16.Sti.S.B 17-32	HA.16.Sti.SC.B 17-32	HA.16.Sti.C.B 17-32	HA.16.Sti.SC.B 1-16	HA.16.Sti.C.B 1-16	HA.16.Sti.S.B 1-16					

THIS DRAWING IS A CONTROLLED DOCUMENT.

DIMENSIONS: mm

TOLERANCES UNLESS OTHERWISE SPECIFIED:
n ISO 8015
n DIN 13461 - ms -E
n DIN 13451 - N9
0 PLC ± -
1 PLC ± -
2 PLC ± -
3 PLC ± -
4 PLC ± -
ANGLES ± -

MATERIAL -
FINISH -

DWN	Schneider	09.02.2000
CHK	Schweiger	09.02.2000
APVD	—	
PRODUCT SPEC	108-74007	
APPLICATION SPEC	114-77009	
WEIGHT	—	

TE Connectivity

NAME: Male insert HA.16.Sti.C

SIZE	CAGE CODE	DRAWING NO	RESTRICTED TO
A2	00779	C-1103416	—

CUSTOMER DRAWING | SCALE 1:1 | SHEET 1 OF 1 | REV D3

1103416