Chipsmall Limited consists of a professional team with an average of over 10 year of expertise in the distribution of electronic components. Based in Hongkong, we have already established firm and mutual-benefit business relationships with customers from,Europe,America and south Asia,supplying obsolete and hard-to-find components to meet their specific needs.

With the principle of “Quality Parts,Customers Priority,Honest Operation,and Considerate Service”,our business mainly focus on the distribution of electronic components. Line cards we deal with include Microchip,ALPS,ROHM,Xilinx,Pulse,ON,Everlight and Freescale. Main products comprise IC,Modules,Potentiometer,IC Socket,Relay,Connector.Our parts cover such applications as commercial,industrial, and automotives areas.

We are looking forward to setting up business relationship with you and hope to provide you with the best service and solution. Let us make a better world for our industry!

Contact us

Tel: +86-755-8981 8866 Fax: +86-755-8427 6832
Email & Skype: info@chipsmall.com Web: www.chipsmall.com
Address: A1208, Overseas Decoration Building, #122 Zhenhua RD., Futian, Shenzhen, China

THIS DRAWING IS UNPUBLISHED. RELEASED FOR PUBLICATION 1997
© COPYRIGHT 1997 - ALL RIGHTS RESERVED.

LOC	DIST
A1	-

REVISIONS

P	LTR	DESCRIPTION	DATE	DWN	APVD
	B13	Released As per ECR-09-005436	9-Mar-2009	CJ	TS
	B14	ECR-11-002636	05APR2011	SR	AR

PN 1-1,2-1,3-1,4-1,5-1,1-2,2-2,3-2
4-2,5-2,6-1,~~4-3~~,1-8,2-8,3-8,4-8,5-8,
4-9,2-9,3-9,4-9 & 5-9

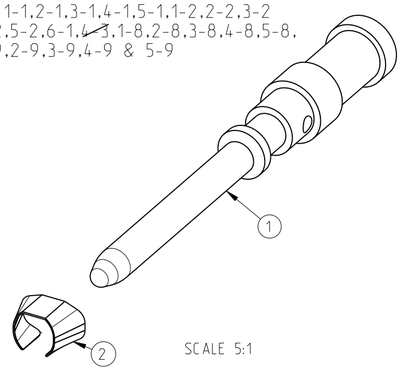

SCALE 5:1

NOTES

1. MATERIAL SEE TABLE
2. SURFACE SEE TABLE
3. ASSEMBLY WEIGHT SEE TABLE
4. PACKAGING: 50 PIECES IN POLY-BAG 0-1243085-8
5. PACKAGING: 500 PIECES IN POLY-BAG 0-1243085-8
6. PACKAGING: 10 PIECES IN POLY-BAG 0-1243085-8
7. CROSS-SECTION MARKING

PN 1-1,2-1,3-1,4-1,5-1,1-2,2-2,3-2
4-2,5-2,6-1,~~4-3~~,1-8,2-8,3-8,4-8,5-8,
4-9,2-9,3-9,4-9 & 5-9

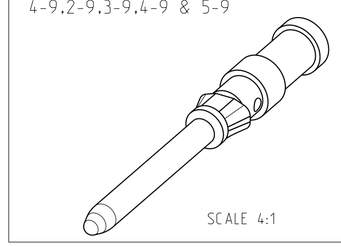

SCALE 4:1

PN 1-1,2-1,3-1,4-1,5-1,1-2,2-2,3-2
4-2,5-2,6-1,~~4-3~~,1-8,2-8,3-8,4-8,5-8,
4-9,2-9,3-9,4-9 & 5-9

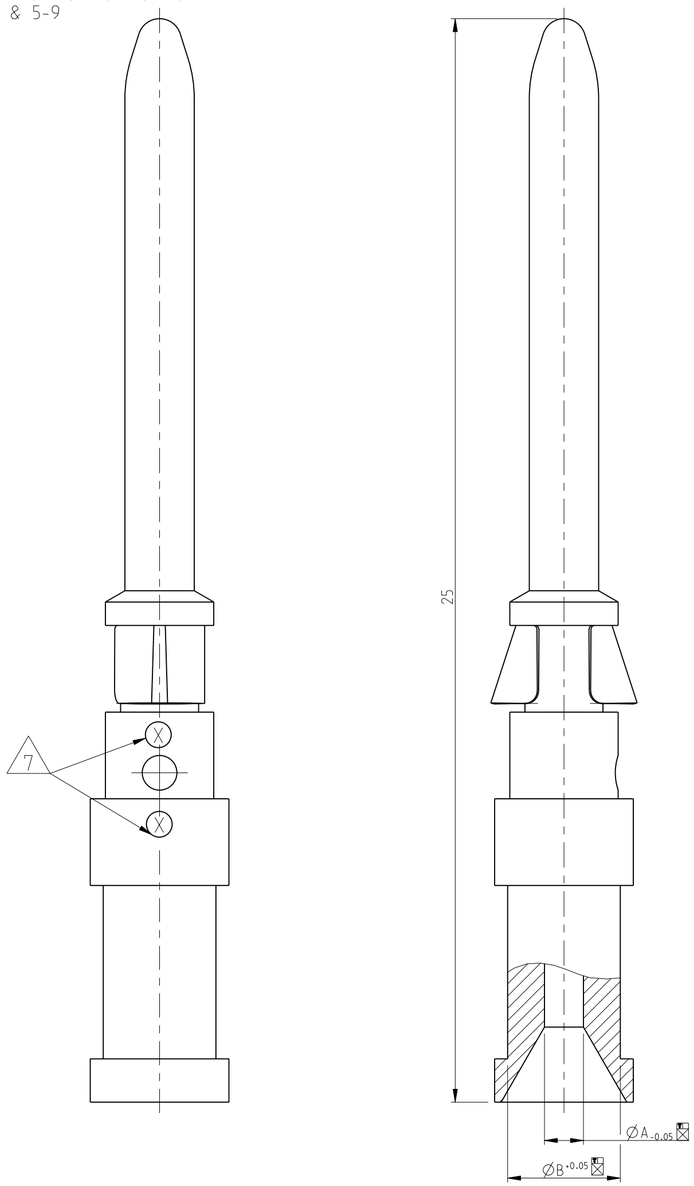

OBSOLETE	OBSOLETE	OBSOLETE																3	1	2			7	
			1	1	1	1	1	1	1	1	1	1	1	1	Catch Spring		Stainless Steel						2
1															Pin Contact 1.5 mm²	0.00062	Ms/Brass	Ag/Ni	1.8	3.0	4		
	1														Pin Contact 4.0 mm²	0.00059	Ms/Brass	Ag/Ni	2.4	3.2	6		
				1											Pin Contact 2.5 mm²	0.00067	Ms/Brass	Au	2.2	3.2	5		
					1										Pin Contact 1.5 mm²	0.00067	Ms/Brass	Au	1.8	3.0	4		
						1									Pin Contact 0.75-10 mm²	0.00063	Ms/Brass	Au	1.45	2.6	3		
							1								Pin Contact 0.5 mm²	0.00062	Ms/Brass	Au	1.1	2.6	2		
								1							Pin Contact 0.14-0.37 mm²	0.00061	Ms/Brass	Au	0.9	2.6	1		
									1						Pin Contact 2.5 mm²	0.00065	Ms/Brass	Ag/Cu	2.2	3.2	5	1	
										1					Pin Contact 1.5 mm²	0.00067	Ms/Brass	Ag/Cu	1.8	3.0	4		
											1				Pin Contact 0.75-10 mm²	0.00063	Ms/Brass	Ag/Cu	1.45	2.6	3		
												1			Pin Contact 0.5 mm²	0.00062	Ms/Brass	Ag/Cu	1.1	2.6	2		
OBSOLETE				1											~~Pin Contact 0.14-0.37 mm²~~	~~0.00061~~	~~Ms/Brass~~		~~0-9~~	~~2.6~~	~~1~~		
OBSOLETE					1										~~Pin Contact 0.14-0.37 mm²~~	~~0.00065~~	~~Fe~~	~~Au~~	~~0-9~~	~~2.6~~	~~1~~		
														1	Pin Contact 0.14-0.37 mm²	0.00067	Ms/Brass	Ag/Cu	0-9	2.6	1		
			4	4	6	6	4	4	4	4	4	4	4	4	4								
			4-3	6-1	1-4	1-3	5-2	4-2	3-2	2-2	1-2	5-1	4-1	3-1	2-1	1-1	DESCRIPTION	WEIGHT IN (Kg)	MATERIAL	SURFACE	ØA	ØB	CROSS SECTION MARKING	POS
							5	5	5	5	5	5	5	5	5	5								
							5-9	4-9	3-9	2-9	1-9	5-8	4-8	3-8	2-8	1-8								
			HND-C-Sti.Ag/Ni.1.5 mm²	HND-C-Sti.Ag/Ni.4.0 mm²	HN.D-C-Sti.CuNi.0.14 -0.37 mm²	HN.D-C-Sti.Fe.Au.0.14 -0.37 mm²	HN.D-C-Sti.Au.2.5 mm²	HN.D-C-Sti.Au.1.5 mm²	HN.D-C-Sti.Au.0.75-1.00 mm²	HN.D-C-Sti.Au.0.5 mm²	HN.D-C-Sti.Au.0.14 -0.37 mm²	HN.D-C-Sti.Ag.2.5 mm²	HN.D-C-Sti.Ag.1.5 mm²	HN.D-C-Sti.Ag.0.75-1.00 mm²	HN.D-C-Sti.Ag.0.5 mm²	HN.D-C-Sti.Ag.0.14 -0.37 mm²								

THIS DRAWING IS A CONTROLLED DOCUMENT.

DIMENSIONS: mm

TOLERANCES UNLESS OTHERWISE SPECIFIED:
ISO 8015
DIN ISO 2768 mm-E
DIN 16901-120
0 PLC
1 PLC
2 PLC
3 PLC
4 PLC
ANGLES ±1°

MATERIAL 1 -

FINISH 2 -

DWN Braun 23.07.1997
CHK Schnurpfeil 23.07.1997
APVD -
PRODUCT SPEC 108-74018
APPLICATION SPEC 114-74015
WEIGHT -

TE Connectivity

NAME
PIN CONTACT
SERIES HN.D
-

SIZE	CAGE CODE	DRAWING NO	RESTRICTED TO
A2	00779	C-1105050	-

CUSTOMER DRAWING

SCALE 10:1 SHEET 1 OF 1 REV B14