Chipsmall Limited consists of a professional team with an average of over 10 year of expertise in the distribution of electronic components. Based in Hongkong, we have already established firm and mutual-benefit business relationships with customers from,Europe,America and south Asia,supplying obsolete and hard-to-find components to meet their specific needs.

With the principle of “Quality Parts,Customers Priority,Honest Operation,and Considerate Service”,our business mainly focus on the distribution of electronic components. Line cards we deal with include Microchip,ALPS,ROHM,Xilinx,Pulse,ON,Everlight and Freescale. Main products comprise IC,Modules,Potentiometer,IC Socket,Relay,Connector.Our parts cover such applications as commercial,industrial, and automotives areas.

We are looking forward to setting up business relationship with you and hope to provide you with the best service and solution. Let us make a better world for our industry!

Contact us

Tel: +86-755-8981 8866 Fax: +86-755-8427 6832
Email & Skype: info@chipsmall.com Web: www.chipsmall.com
Address: A1208, Overseas Decoration Building, #122 Zhenhua RD., Futian, Shenzhen, China

THIS DRAWING IS UNPUBLISHED
VERTRAULICHE UNVEROEFFENTLICHE ZEICHNUNG

RELEASE FOR PUBLIKATION ,2000
FREI FUER VEROEFFENTLICHUNG

© COPYRIGHT 2000 BY AMP INCORPORATED ALL RIGHTS RESERVED
ALLE RECHTE VORBEHALTEN

MATED WITH:
PASSEND ZU:
1110948, 1110949

LOC	DIST
AI	-

PROJEKT NR. B901815

REVISIONS
AENDERUNGEN

P	LTR	DESCRIPTION BESCHREIBUNG	DATE	DWN	APVD
B3		ECR-05-015793 PN 1-1 ADDED	25.10.2005	BR	ST

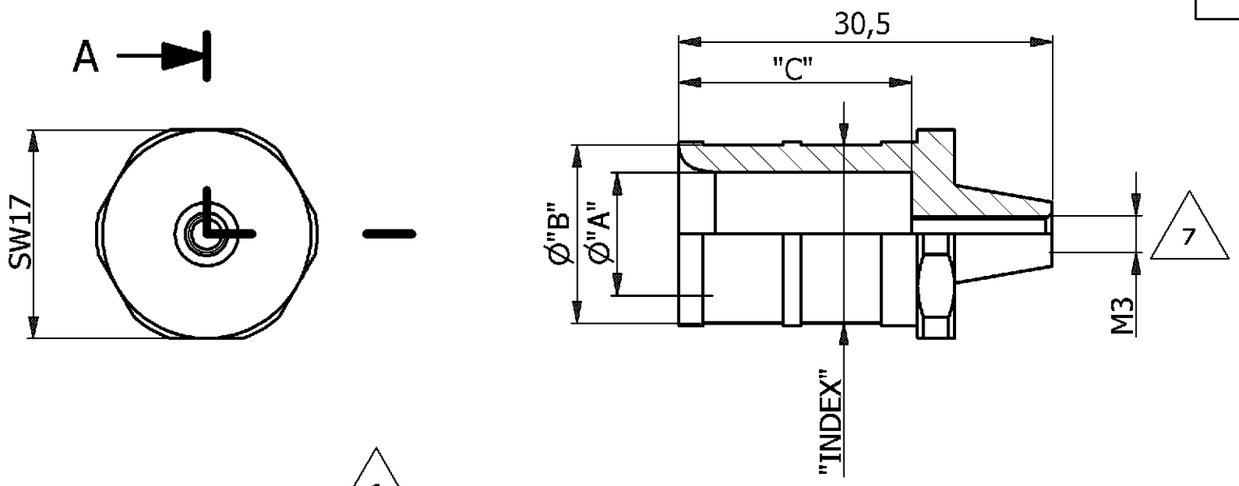

6

PART NO. / QUANTITY 1-1	1-0	0-9	0-8	0-7	0-6	0-5	0-4	0-3	0-2	0-1	DESCRIPTION	INDEX ACC. TO DIN 48083	A	B	C	MATERIAL	SURFACE	[kg] WEIGHT	NOTE	ITEM
-	-	-	1	-	1	-	1	-	-	-	SHRINK. TUBE	-	-	-	-	PO	BLACK	0,004	18 / 45	14
1	1	1	-	1	-	1	-	-	-	-	SHRINK. TUBE	-	-	-	-	PO	BLACK	0,003	18 / 25	13
-	-	-	-	-	-	-	-	1	1	1	SHRINK. TUBE	-	-	-	-	PO	BLACK	0,002	12 / 25	12
1	-	-	-	-	-	-	-	-	-	-	CRIMP BARREL	14	11,5	14,0	19	COPPER	SILVER PLATED	0,018	WIRE SIZE 50 MM³	11
-	1	-	-	-	-	-	-	-	-	-	CRIMP BARREL	16	11,8	16,5	19	COPPER	SILVER PLATED	0,027	WIRE SIZE 70 MM³	10
-	-	1	-	-	-	-	-	-	-	-	CRIMP BARREL	14	10,0	14,5	19	COPPER	SILVER PLATED	0,024	WIRE SIZE 50 MM³	9
-	-	-	1	-	-	-	-	-	-	-	CRIMP BARREL	14	9,8	14,5	19	COPPER	SILVER PLATED	0,025	WIRE SIZE 48 MM³	8
-	-	-	-	1	-	-	-	-	-	-	CRIMP BARREL	12	8,2	12,5	19	COPPER	SILVER PLATED	0,021	WIRE SIZE 35 MM³	7
-	-	-	-	-	1	-	-	-	-	-	CRIMP BARREL	12	8,5	12,5	19	COPPER	SILVER PLATED	0,020	WIRE SIZE 30 MM³	6
-	-	-	-	-	-	1	-	-	-	-	CRIMP BARREL	10	7,0	10,0	19	COPPER	SILVER PLATED	0,016	WIRE SIZE 25 MM³	5
-	-	-	-	-	-	-	1	-	-	-	CRIMP BARREL	8	5,9	8,5	19	COPPER	SILVER PLATED	0,014	WIRE SIZE 18 MM³	4
-	-	-	-	-	-	-	-	1	-	-	CRIMP BARREL	8	5,5	8,5	19	COPPER	SILVER PLATED	0,015	WIRE SIZE 16 MM³	3
-	-	-	-	-	-	-	-	-	1	-	CRIMP BARREL	6	4,5	6,0	19	COPPER	SILVER PLATED	0,011	WIRE SIZE 10 MM³	2
-	-	-	-	-	-	-	-	-	-	1	CRIMP BARREL	5	3,8	5,5	19	COPPER	SILVER PLATED	0,010	WIRE SIZE 06 MM³	1

ORDERING TEXT: CH.6.MM²-6MM WIRE: H07V-K 1x6MM²
ORDERING TEXT: CH.10.MM²-6MM WIRE: H07V-K 1x10MM²
ORDERING TEXT: CH.16 MM²-6MM WIRE: H07V-K 1x16MM²
ORDERING TEXT: CH.18.MM²-6MM WIRE: RADOX 155, ZYRAD 555, BETATHERM 155 3x6MM²
ORDERING TEXT: CH.25.MM²-6MM WIRE: H07V-K 1x25MM²
ORDERING TEXT: CH.30.MM²-6MM WIRE: RADOX 155, ZYRAD 555, BETATHERM 155 3x10MM²
ORDERING TEXT: CH.35.MM²-6MM WIRE: LAPP H07V-K, H07V-K UL STYLE 1015, CSA, TEW 1x35MM²
ORDERING TEXT: CH.48.MM²-6MM WIRE: RADOX 155, ZYRAD 555, BETATHERM 155 3x16MM²
ORDERING TEXT: CH.50.MM²-6MM WIRE: LAPP H07V-K, H07V-K UL STYLE 1015, CSA, TEW 1x50MM²
ORDERING TEXT: CH.70.MM²-6MM WIRE: LAPP H07V-K, H07V-K UL STYLE 1015, CSA, TEW 1x70MM², 2x35MM²
ORDERING TEXT: CH.50H.MM²-6MM WIRE: HIGH FLEX. WIRE ACC. TO DIN 46438

NOTES

1 SUITABLE CONTACTS: SERIES HF06
CUSTOMER DRAWING: 11100948, 1110949

2 SUITABLE CONTACTS: SERIES HF08
CUSTOMER DRAWING: 1103037, 1103038

3 SUITABLE CRIMPING TOOL: HYDR. TOOL 30kN
CUSTOMER DRAWING: 1105653

4 SUITABLE CRIMPING TOOL: HYDR. TOOLS 60kN
CUSTOMER DRAWING: 1110956

5 DIE SIZE "INDEX" ACC. TO DIN 48083, SEE CUSTOMER DRAWINGS OF CRIMPING TOOLS

6 SHRINK. TUBE ACC. TO MIL I-23053 B/5, RATE 3:1

7 STANDARDS:
DIN EN 61984; DIN EN 60664-1

8 PACKAGING:
10 SETS IN A CARTON

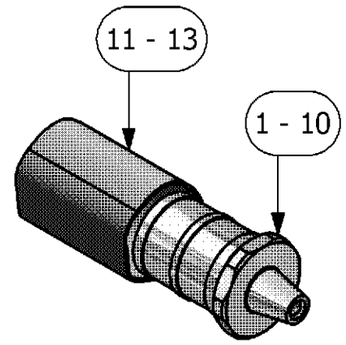

M 1:1

THIS DRAWING IS A CONTROLLED DOCUMENT FOR AMP INCORPORATED. IT IS SUBJECT TO CHANGE AND THE CONTROLLING ENGINEERING ORGANIZATION SHOULD BE CONTACTED FOR THE LATEST REVISION. DIESES ZEICHNUNGSDOKUMENT WIRD DURCH AMP INCORPORATED KONTROLLIERT. ABNDERUNGEN, DIE DEM TECHNISCHEN FORTSCHRITT DIENEN, SIND VORBEHALTEN. DEN JEWEILS LETZTGUELTIGEN AENDERUNGSSTAND ERFAHREN SIE AUF ANFRAGE.

DIMENSIONS:
DIMENSIONEN:
mm

TOLERANCES UNLESS OTHERWISE SPECIFIED:
ALLGEMEINTOLERANZEN
n. ISO 8015 -
n. ISO 2768 - mH-E
n. DIN 16901- 140
0 PLC #
1 PLC #
2 PLC #
3 PLC #
ANGLES / WINKEL #

MATERIAL

FINISH / OBERFLAECHE / FARBE

DWN H.BRAUN 25.10.2005
CHK
APVD T.SCHNURPFEIL 25.10.2005
PRODUCT SPEC. PRODUKTSPEZ. 108-74024
APPLICATION SPEC. VERARBEITUNGSSPEZ. 114-74031
WEIGHT GEWICHT SEE TABLE

tyco Electronics
Tyco / Electronics AMP GmbH
D - 53819 Neunkirchen

NAME
CRIMP BARREL
SERIES HF06, HF08

SIZE A3
CAGE CODE 00779
DRAWING NO ZEICHNUNGS-NR. C- 1110952
RESTRICTED TO NUR FUER

CUSTOMER DRAWING / KUNDENZEICHNUNG
SCALE MASSSTAB 2:1 SHEET BLATT 1 OF VON 1 REV. B3

K:\Prod_Eng\3D-Bibliothek\Crimphulsen\HFC1110952.dw

AMP 1471-9 REV 27JUN96

This is a TRANSLATED file from Computervision, Inc,, Medusa Revision 12.2.5T