Chipsmall Limited consists of a professional team with an average of over 10 year of expertise in the distribution of electronic components. Based in Hongkong, we have already established firm and mutual-benefit business relationships with customers from,Europe,America and south Asia,supplying obsolete and hard-to-find components to meet their specific needs.

With the principle of “Quality Parts,Customers Priority,Honest Operation,and Considerate Service”,our business mainly focus on the distribution of electronic components. Line cards we deal with include Microchip,ALPS,ROHM,Xilinx,Pulse,ON,Everlight and Freescale. Main products comprise IC,Modules,Potentiometer,IC Socket,Relay,Connector.Our parts cover such applications as commercial,industrial, and automotives areas.

We are looking forward to setting up business relationship with you and hope to provide you with the best service and solution. Let us make a better world for our industry!

Contact us

Tel: +86-755-8981 8866 Fax: +86-755-8427 6832
Email & Skype: info@chipsmall.com Web: www.chipsmall.com
Address: A1208, Overseas Decoration Building, #122 Zhenhua RD., Futian, Shenzhen, China

DRAWING MADE IN THIRD ANGLE PROJECTION

THIS DRAWING IS UNPUBLISHED. RELEASED FOR PUBLICATION ,19 .

© COPYRIGHT 19 BY AMP INCORPORATED. ALL INTERNATIONAL RIGHTS RESERVED.

CODE	DIVISION	P	F	ZONE	LTR	REVISIONS DESCRIPTION	DATE	APPD
GP	00				C	REVISED PER EC 0513-0048-03	1998-09	JG

1. POLYESTER, BLACK, UL 94V-0 RATED.
2. PHOSPHOR BRONZE PER QQ-P-750.
3. 2.54µm[.000100] MIN TIN OR TIN-LEAD OVER 1.27µm[.000050] MIN NICKEL.
4. CONTACTS WILL ACCEPT 28 AWG STRANDED OR 26, 28, 30 AWG SOLID WIRE.
5. HEIGHT AFTER TERMINATION IS 6.43[.253].

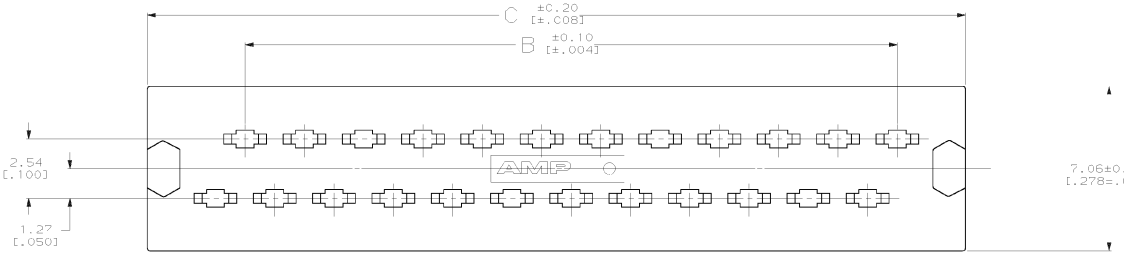

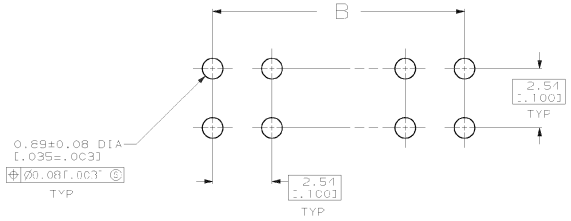

RECOMMENDED HOLE LAYOUT

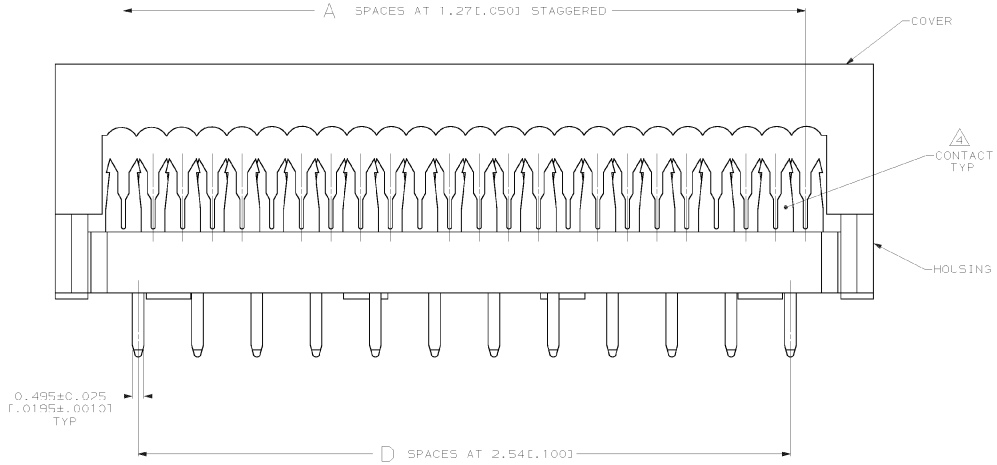

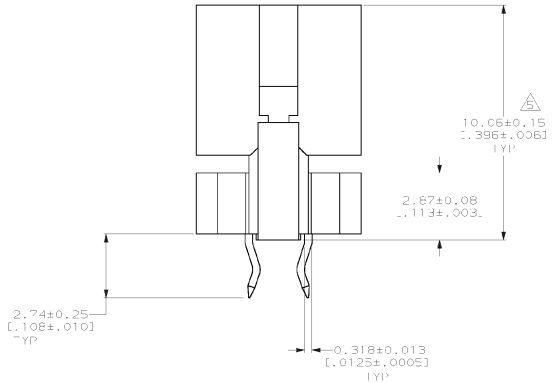

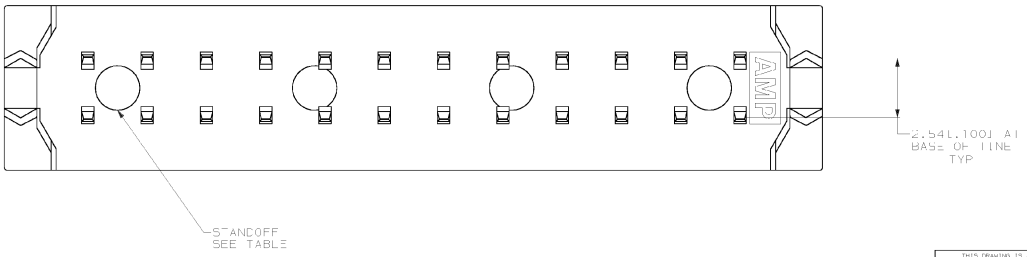

	NO OF STANDOFFS D	C	B	A	NO OF POSN	PART NO
OBSOLETE	10	3	85.85[3.380]	78.74[3.100]	63	54	1-111852-2
OBSOLETE	9	29	80.77[3.180]	73.66[2.900]	59	50	1-111852-1
	8	24	68.07[2.680]	60.96[2.400]	49	50	1-111852-0
OBSOLETE	7	19	55.37[2.180]	48.26[1.900]	39	40	111852-9
OBSOLETE	6	16	47.75[1.880]	40.64[1.600]	33	34	111852-8
OBSOLETE	4	12	37.59[1.480]	30.48[1.200]	25	26	111852-6
OBSOLETE	4	11	35.05[1.380]	27.94[1.100]	23	24	111852-5
OBSOLETE	3	6	22.35[.880]	15.24[.600]	13	14	111852-2
OBSOLETE	2	4	17.27[.680]	10.16[.400]	9	10	111852-1

DO NOT SCALE PRINT.
UNLESS SPECIFIED
DIMENSIONS IN mm [INCHES]
TOLERANCES ON :
2 PLC DEC ± 0.13 [.005]
3 PLC DEC ± - -
ANGLES ± - -

MATERIAL
HOUSING & COVER: 1
CONTACTS: 2

FINISH
CONTACTS: 3

DR 9-13-94 C.OBERMAN
CHK 9-16-94 R.STONE
APPD 9-16-94 K.DOWHOWER
APPD 9-16-94 C.HOFFMAN

PRODUCT SPEC
108-40013

APPLICATION SPEC
114-40005

WEIGHT -

AMP Incorporated
Harrisburg, PA 17105-3608

NAME
PLUG ASSEMBLY, DIP, AMP LATCH™

SIZE	CAGE CODE	DRAWING NO
D	00779	C-111852

SCALE 10:1 SHEET 1 OF 1

THIS DRAWING IS A CONTROLLED DOCUMENT FOR AMP INCORPORATED. IT IS SUBJECT TO CHANGE AND THE CONTROLLING ENGINEERING ORGANIZATION SHOULD BE CONTACTED FOR THE LATEST REVISION.

CUSTOMER DRAWING