Chipsmall Limited consists of a professional team with an average of over 10 year of expertise in the distribution of electronic components. Based in Hongkong, we have already established firm and mutual-benefit business relationships with customers from,Europe,America and south Asia,supplying obsolete and hard-to-find components to meet their specific needs.

With the principle of “Quality Parts,Customers Priority,Honest Operation,and Considerate Service”,our business mainly focus on the distribution of electronic components. Line cards we deal with include Microchip,ALPS,ROHM,Xilinx,Pulse,ON,Everlight and Freescale. Main products comprise IC,Modules,Potentiometer,IC Socket,Relay,Connector.Our parts cover such applications as commercial,industrial, and automotives areas.

We are looking forward to setting up business relationship with you and hope to provide you with the best service and solution. Let us make a better world for our industry!

Contact us

Tel: +86-755-8981 8866 Fax: +86-755-8427 6832
Email & Skype: info@chipsmall.com Web: www.chipsmall.com
Address: A1208, Overseas Decoration Building, #122 Zhenhua RD., Futian, Shenzhen, China

LOC	DIST
GW	–

REVISIONS

P	LTR	DESCRIPTION	DATE	DWN	APVD
	A1	REVISED PER ECO-11-005294	06APR11	RK	HMR

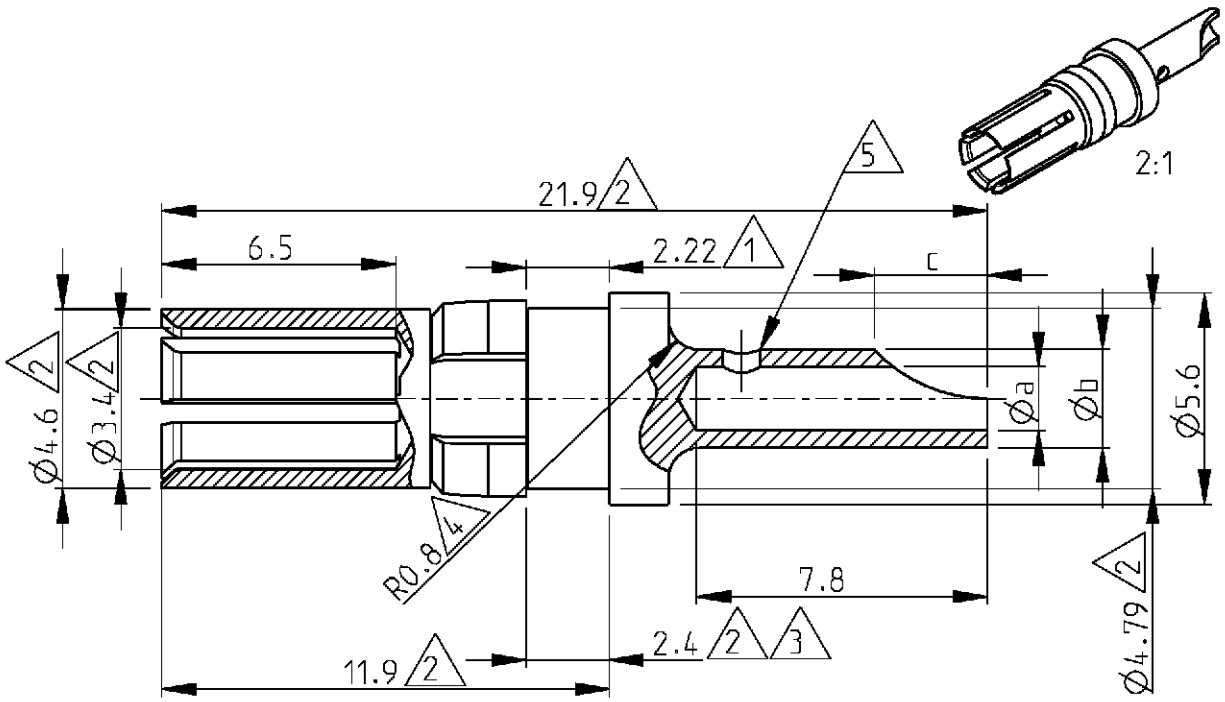

6) Application : DIN 41612 type M.

5 Only on 1-1393589-1

4 Not applicable on 1393589-7

3 Measured with spring moved towards the mating face

2 Max dimension

1 Min dimension

Cross reference table

Old part number	part number	Current	Øa	Øb	dim c	Material	Plating
1-1393589-1	C42334-A347-A96	10 A	1.7	2.6	3	Brass	1 µm Au or Pd in contact area
1393589-9	C42334-A347-A95	20 A	2.8	3.7	4	Brass	1 µm Au or Pd in contact area
1393589-7	C42334-A347-A94	40 A	4.8	5.6	5.2	Brass	1 µm Au or Pd in contact area

THIS DRAWING IS UNPUBLISHED. © COPYRIGHT ALL RIGHTS RESERVED. RELEASED FOR PUBLICATION

DIMENSIONS: mm

TOLERANCES UNLESS OTHERWISE SPECIFIED:

0 PLC ±
1 PLC ±
2 PLC ±
3 PLC ±
4 PLC ±
ANGLES ±

DWN B. Lenvain 23APR2001
CHK K. Mattheeuws 23APR2001
APVD R. Leeman 23APR2001

PRODUCT SPEC –

APPLICATION SPEC –

WEIGHT –

MATERIAL –

FINISH –

TE Connectivity

NAME High current socket with wire connection

SIZE	CAGE CODE	DRAWING NO	RESTRICTED TO
A4	00779	C-1393589-7	–

CUSTOMER DRAWING

SCALE 5/1 SHEET 1 OF 1 REV A1