Chipsmall Limited consists of a professional team with an average of over 10 year of expertise in the distribution of electronic components. Based in Hongkong, we have already established firm and mutual-benefit business relationships with customers from,Europe,America and south Asia,supplying obsolete and hard-to-find components to meet their specific needs.

With the principle of “Quality Parts,Customers Priority,Honest Operation,and Considerate Service”,our business mainly focus on the distribution of electronic components. Line cards we deal with include Microchip,ALPS,ROHM,Xilinx,Pulse,ON,Everlight and Freescale. Main products comprise IC,Modules,Potentiometer,IC Socket,Relay,Connector.Our parts cover such applications as commercial,industrial, and automotives areas.

We are looking forward to setting up business relationship with you and hope to provide you with the best service and solution. Let us make a better world for our industry!

Contact us

Tel: +86-755-8981 8866 Fax: +86-755-8427 6832
Email & Skype: info@chipsmall.com Web: www.chipsmall.com
Address: A1208, Overseas Decoration Building, #122 Zhenhua RD., Futian, Shenzhen, China

THIS DRAWING IS UNPUBLISHED. RELEASED FOR PUBLICATION
© COPYRIGHT BY TYCO ELECTRONICS CORPORATION. ALL RIGHTS RESERVED.

LOC	DIST
J	—

REVISIONS 変更

P	LTR	DESCRIPTION	DATE	DWN	APVD
	0	Released(FJ00-1444-00)	20SEP00	(K.T)	KK

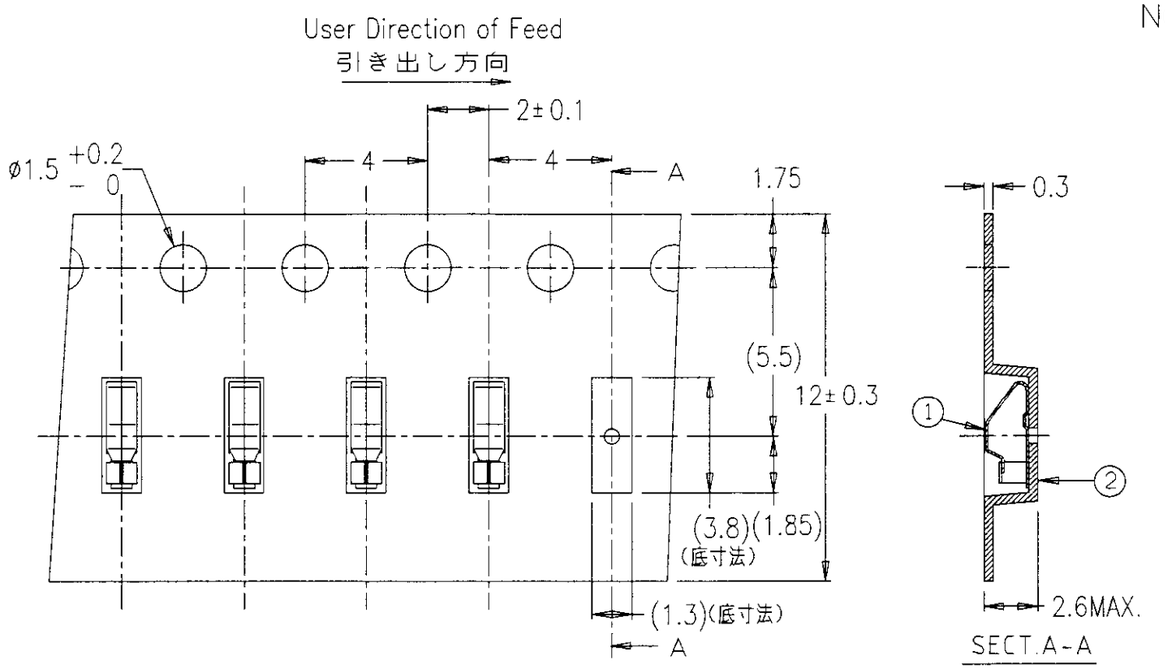

注記
NOTE

1. 一般公差：±0.2
1. GENERAL TOLERANCE : ±0.2
2. 梱包数量：5,000ヶ/リール
2. PACKING STYLE : 5,000pcs/reel
3. 材質：
3. MATERIAL :
シールドフィンガー：銅合金（前めっき：ニッケル下地金めっき 0.05μmMIN.）
SHIELD FINGER : COPPER ALLOY(NICKEL-PLATING)
(GOLD-PLATING ON THE CONTACT AND FOOT AREA)
キャリアテープ：フィルム（黒）
CARRIER TAPE : FILM
カバーテープ：フィルム
TOP TAPE : FILM
リール：プラリール
REEL : PLASTIC
4. リードテープ長さ：下図参照
4. TAPES DIMENSION

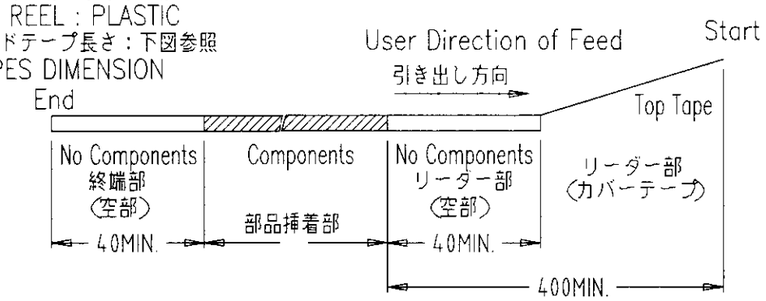

5. リール参考寸法：下図参照
5. REEL DIMENSION : REFERENCE ONLY

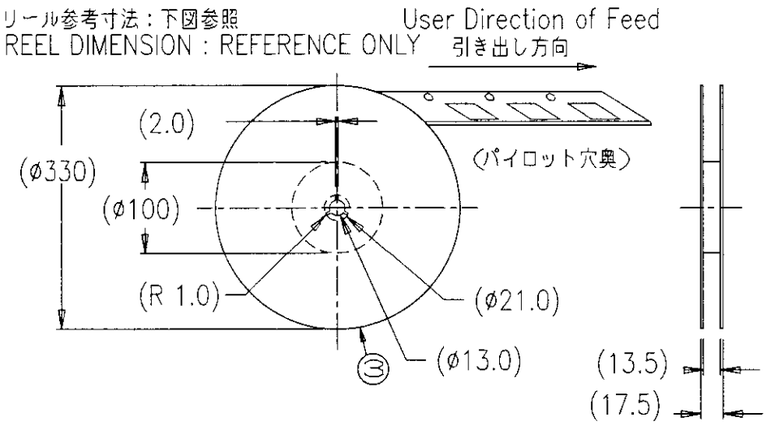

シールドフィンガー1410
SHIELD FINGER 1410

旧型番：3400265-10 S=10/1
OLD CAT.NO.3400265-10

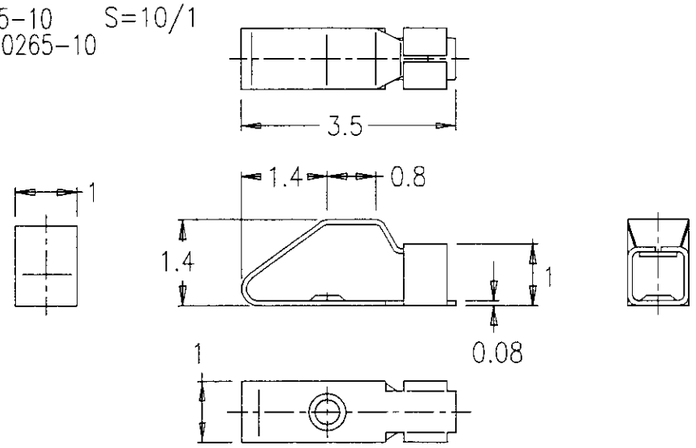

参考パッド寸法（公差±0.1）
RECOMMECDED FOOT PRINT
REFERENCE ONLY
TOLERANCE : ±0.1

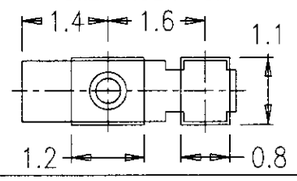

テーピング梱包型番 PACKAGING Cat. No.	旧テーピング梱包型番 PACKAGING Cat. No.	No.	名称 DESIGNATION	型番 Cat. No.	数量 QUANTITY
1-1447360-1	3100121	③	リール REEL		1
		②	エンボスキャリアテープ CARRIER TAPE		5000ポケット（部品装着部）
		①	シールドフィンガー1410 SHIELD FINGER 1410	1-1447360-8（旧型番：3400265-10）	5000ヶ

THIS DRAWING IS A CONTROLLED DOCUMENT.

DIMENSIONS: MM

TOLERANCES UNLESS OTHERWISE SPECIFIED:
0 PLC ±-
1 PLC ±-
2 PLC ±-
3 PLC ±-
4 PLC ±-
ANGLES ±-

MATERIAL 3
FINISH —

DWN (K.TAMURA) 20SEP00
CHK T.KUBO 16OCT00
APVD 16OCT00
PRODUCT SPEC —
APPLICATION SPEC —
WEIGHT —

AMP Tyco Electronics AMP K.K. Kawasaki,Japan

NAME
シールドフィンガー1410用 テーピング梱包
PACKAGING OF SHIELD FINGER 1410 ON CONTINUOUS TAPES

SIZE	CAGE CODE	DRAWING NO	RESTRICTED TO
A3	00779	C-1-1447360-1	—

CUSTOMER DRAWING | SCALE 5:1 | SHEET 1 OF 1 | REV 0

C3100121
E3100121