Chipsmall Limited consists of a professional team with an average of over 10 year of expertise in the distribution of electronic components. Based in Hongkong, we have already established firm and mutual-benefit business relationships with customers from,Europe,America and south Asia,supplying obsolete and hard-to-find components to meet their specific needs.

With the principle of “Quality Parts,Customers Priority,Honest Operation,and Considerate Service”,our business mainly focus on the distribution of electronic components. Line cards we deal with include Microchip,ALPS,ROHM,Xilinx,Pulse,ON,Everlight and Freescale. Main products comprise IC,Modules,Potentiometer,IC Socket,Relay,Connector.Our parts cover such applications as commercial,industrial, and automotives areas.

We are looking forward to setting up business relationship with you and hope to provide you with the best service and solution. Let us make a better world for our industry!

Contact us

Tel: +86-755-8981 8866 Fax: +86-755-8427 6832
Email & Skype: info@chipsmall.com Web: www.chipsmall.com
Address: A1208, Overseas Decoration Building, #122 Zhenhua RD., Futian, Shenzhen, China

DRAWING MADE IN THIRD ANGLE PROJECTION
THIS DRAWING IS UNPUBLISHED. RELEASED FOR PUBLICATION ,19 .
© COPYRIGHT 19 BY AMP INCORPORATED. ALL INTERNATIONAL RIGHTS RESERVED.

LOC	DIST
AD	25

REVISIONS

P	F	ZONE	LTR	DESCRIPTION	DATE	APPD
			O	DRAWN	-	–
			A	EC 0010-1152-95	10/10/95	LSB
			B	REVISED PER 0503-0580-97	9-30-97	JG
			C	PER EC 0G20-0147-98 T.S.	6-4-98	CR
			D	REV PER EC 0U1B-0136-99	06 OCT 99	CR

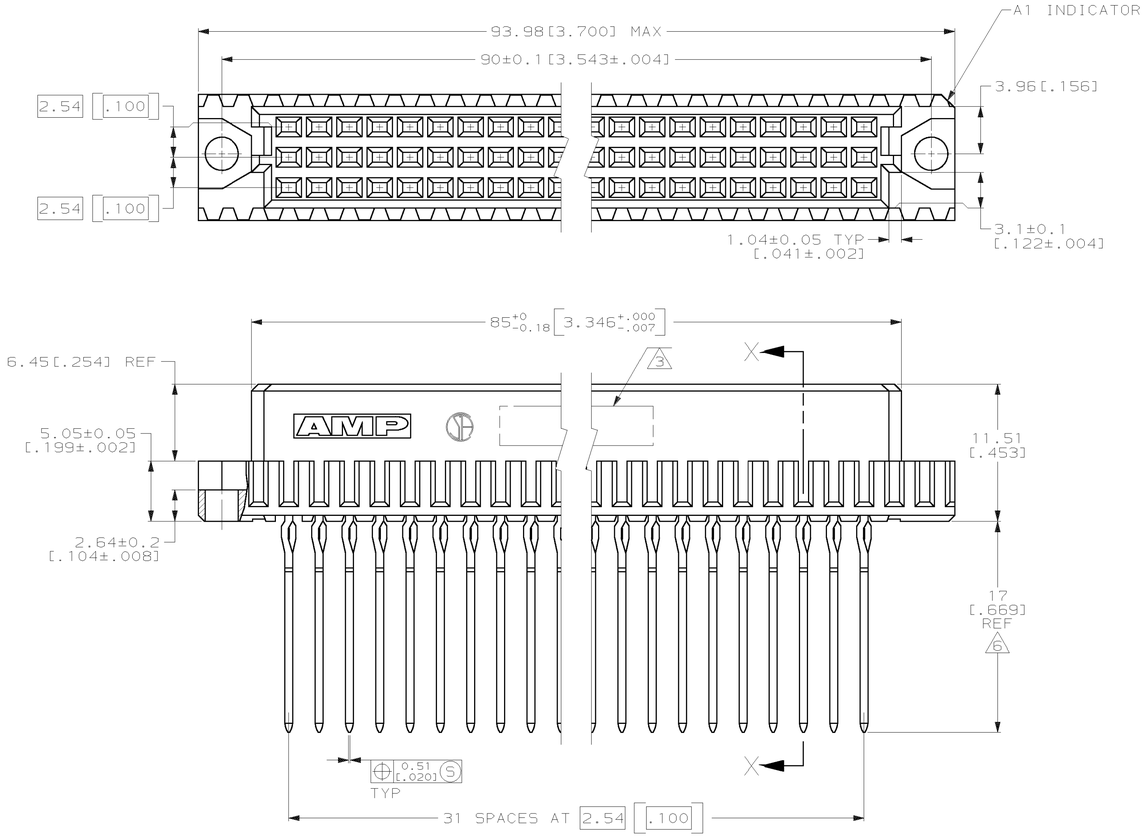

1. HOUSING MATERIAL: GLASS-FILLED POLYESTER. COLOR: GRAY.
2. CONTACT MATERIAL: PHOSPHOR BRONZE.
3. PART NUMBER AND DATE CODE HOT STAMPED IN THIS APPROXIMATE AREA.
4. ACTION PIN POSTS REQUIRE 1.57[.062] MINIMUM THICK PC BOARD. RECOMMENDED PC BOARD DRILLED HOLES ARE 1.15±0.025[.0453±.0010] DIAMETER WITH 0.02-0.08[.001-.003] COPPER AND 0.008[.0003] MINIMUM TIN-LEAD PLATING. FINISHED HOLE AFTER PLATING IS 1.02±0.08[.040±.002] DIAMETER.
5. CONTACT FINISH: DIN 41612 CLASS 2 IN CONTACT AREA. TIN-LEAD PLATE ON POSTS.
6. TAIL LENGTH AFTER SEATING IN PC BOARD.
7. CONTACT FINISH: DIN 41612 CLASS 2 IN CONTACT AREA AND LAST 5.08[.200] OF POST.
8. CONTACT POINT AFTER SEATED IN PC BOARD.
9. HOT STAMPING ON THIS SIDE.

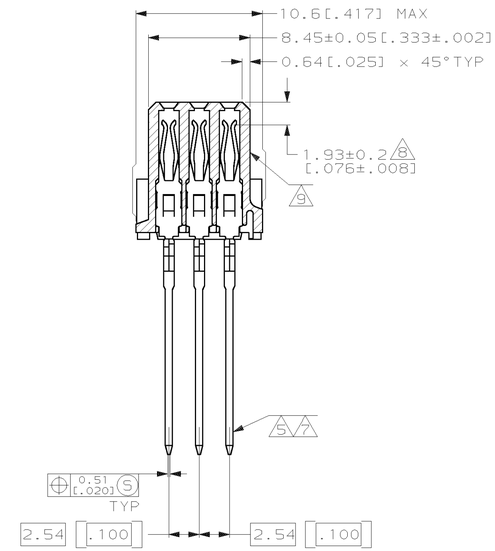

SECTION X-X

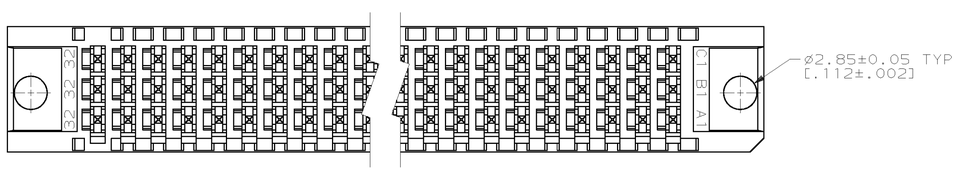

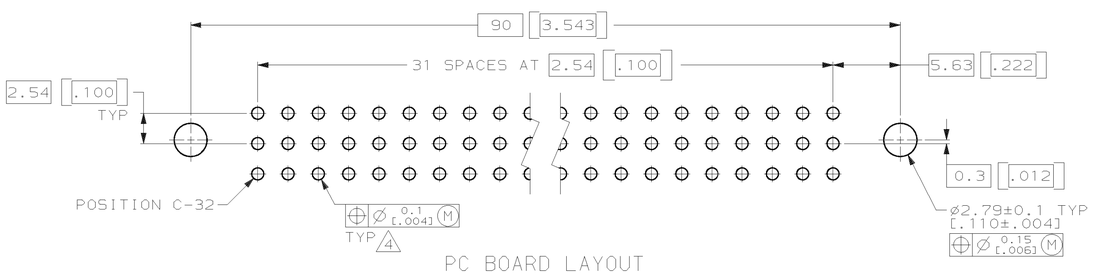

PC BOARD LAYOUT

7	1-148059-5
5	148059-5
FINISH	PART NO

DO NOT SCALE PRINT.
UNLESS SPECIFIED
DIMENSIONS IN mm [INCHES]
TOLERANCES ON :
2 PLC DEC ±0.13[.005]
3 PLC DEC ±-
ANGLES ±-

MATERIAL
HOUSING: 1
CONTACTS: 2

FINISH
CONTACTS: 5

DR L. BRINER	7/26/94	
CHK R. PATTERSON	8/9/94	
APPD R. PATTERSON	8/9/94	
APPD R. PATTERSON	8/9/94	
PRODUCT SPEC –		
APPLICATION SPEC –		
WEIGHT –		

AMP Incorporated
Harrisburg, PA 17105-3608

NAME
RECEPTACLE ASSEMBLY, EUROCARD, TYPE "C"

SIZE	CAGE CODE	DRAWING NO
D	00779	C-148059
SCALE 4:1		SHEET 1 OF 1

THIS DRAWING IS A CONTROLLED DOCUMENT FOR AMP INCORPORATED. IT IS SUBJECT TO CHANGE AND THE CONTROLLING ENGINEERING ORGANIZATION SHOULD BE CONTACTED FOR THE LATEST REVISION.

CUSTOMER DRAWING