Chipsmall Limited consists of a professional team with an average of over 10 year of expertise in the distribution of electronic components. Based in Hongkong, we have already established firm and mutual-benefit business relationships with customers from,Europe,America and south Asia,supplying obsolete and hard-to-find components to meet their specific needs.

With the principle of “Quality Parts,Customers Priority,Honest Operation,and Considerate Service”,our business mainly focus on the distribution of electronic components. Line cards we deal with include Microchip,ALPS,ROHM,Xilinx,Pulse,ON,Everlight and Freescale. Main products comprise IC,Modules,Potentiometer,IC Socket,Relay,Connector.Our parts cover such applications as commercial,industrial, and automotives areas.

We are looking forward to setting up business relationship with you and hope to provide you with the best service and solution. Let us make a better world for our industry!

Contact us

Tel: +86-755-8981 8866 Fax: +86-755-8427 6832
Email & Skype: info@chipsmall.com Web: www.chipsmall.com
Address: A1208, Overseas Decoration Building, #122 Zhenhua RD., Futian, Shenzhen, China

THIS DRAWING IS UNPUBLISHED
VERTRAULICH - UNVERÖFFENTLICHT ZEICHNUNG
© COPYRIGHT - -
RELEASED FOR PUBLICATION JULY -
FREI FUER VEROEFFENTLICHUNG
ALL RIGHTS RESERVED.
ALLE RECHTE VORBEHALTEN.

MATED WITH
PASSEND ZU
1718484

LOC	DIST
A1	-

PROJEKT NR.: EGATN02152

REVISIONS
ÄENDERUNGEN

P	LTR	DESCRIPTION BESCHREIBUNG	DATE	DWN	APVD
	D1	REVISED PER ECO-11-005150	30MAR2011	RK	HMR

FURTHER CODING
weitere Kodierung

/9

CODING B
Kodierung

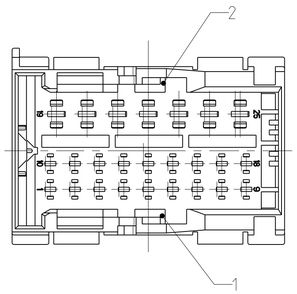

CODING C
Kodierung

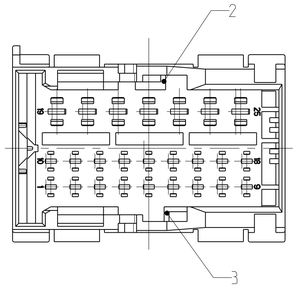

CODING D
Kodierung

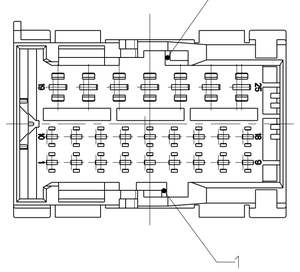

SECONDARY LOCKING IN LOCKED POSITION
Zweite Kontaksicherung in Endraststellung

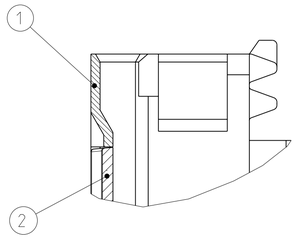

SECONDARY LOCKING IN PRE LOCKED POSITION
Zweite Kontaksicherung in Vorraststellung

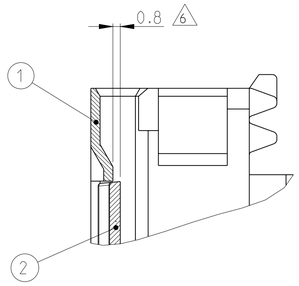

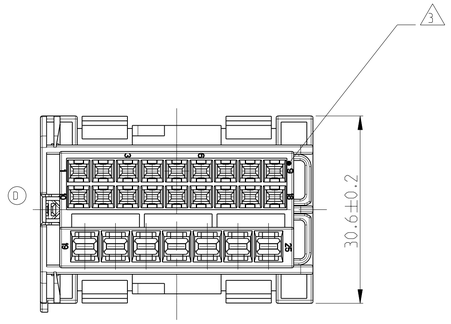

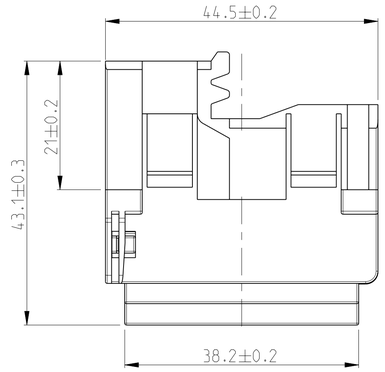

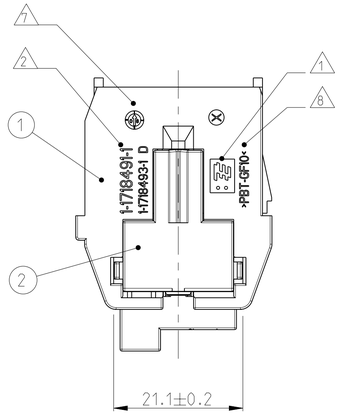

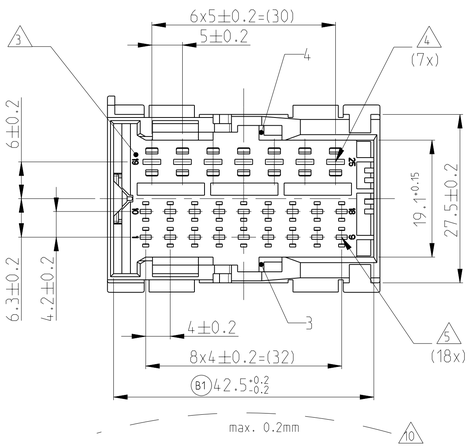

NOTES
Bemerkungen

/1 TE LOGO
TE Logo

/2 TE CONNECTIVITY NUMBER
TE CONNECTIVITY Nummer

/3 CAVITY NUMBERING
Kammernumerierung

/4 CAVITIES MATED WITH TAB 2.8 x 0.8 MM
SEE PRODUCT GROUP DRAWING
TE CONNECTIVITY NO.: 1355052
MAX. WIRESIZE: 2.5MM² FLR
Kontaktkammern passend f Gr Flachstecker 2.8 x 0.8 mm
siehe Produkt-Gruppenzeichnung
TE CONNECTIVITY Nr.: 1355052
max. Drahtgr ßenbereich: 2.5mm2 FLR

/5 CAVITIES MATED WITH TAB 1.6 x 0.6 MM
SEE PRODUCT GROUP DRAWING
TE CONNECTIVITY NO.: 1355055
MAX. WIRESIZE: 1.5MM² FLR
Kontaktkammern passend f Gr Flachstecker 1.6 x 0.6 mm
siehe Produkt-Gruppenzeichnung
TE CONNECTIVITY Nr.: 1355055
max. Drahtgr ßenbereich: 1.5mm2 FLR

/6 SLIDING DISTANCE OF SECONDARY LOCKING
Verschiebeweg der zweiten Kontaktsicherung

/7 PRODUCTION DATE
Produktionsdatum

/8 MATERIAL MARKING ACC. TO VDA 260
Werkstoffkennzeichnung nach

/9 MECHANICAL CODING
Mechanische Kodierung

/10 WARPAGE TO . . . PERMITTED
Verzug zul ssig bis . . .

11 FITS TO TE CONNECTIVITY CARRIER + AMP MCP1.5K/2.8 RECEPTACLE INSERTS. 18+7POS
CARRIER:1718484; INSERT 18POS: 1718489; INSERT 7POS: 1718488
Passend zu TE CONNECTIVITY Tr ger + AMP MCP 1.5K/2.8 Buchseneins tze. 18+7pol.
Tr ger: 1718484. Einsatz 18pol.: 1718489; Einsatz 7pol.: 1718488

12 FITS TO INTERFACE DRAWING 114-18327-1
Passend zu Ausf hrungsvorschrift 114-18327-1

C119 LAYER PACKAGING IN CORRUGATED BOX
Lagenverpackung im Versandkarton

14 MALFUNCTION CAUSED BY LACQUER IS NOT COVERED BY TE CONNECTIVITY WARRANTY
Funktionbeeintr chtigung durch Lackieren liegt nicht im Einfluss und Gew hrleistungsumfang von TE CONNECTIVITY

CUT - OFF
Ausschnitt

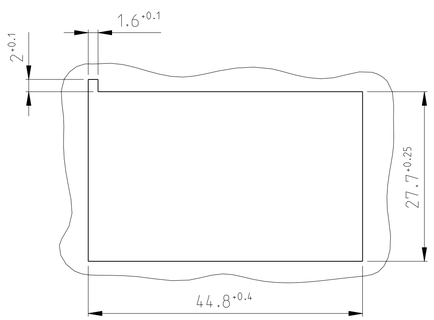

MATERIAL-THICKNESS t= 2.0 +0.3 -0.2

Materialdicke t= 2.0 +0.3 -0.2

DELIVERY CONDITIONS:
Lieferzustand:

2nd LOCKING DEVICE IN PRE LOCKED POSITION
2. Kontaktsicherung in Vorraststellung

CODE Kodierung	ORDER-NO. Bestell-Nr.	REV.	QTY Anzahl	MAT.	COLOUR Farbe	DESCRIPTION Beschreibung	REV.	ITEM
D	1-1718491-4	D	1	PBT-GF30	YELLOW gelb	SECONDARY LOCKING zweite Kontaktsicherung	C	2
			1	PBT-GF10	YELLOW GREEN gelbgruen	TAB HOUSING CODE D Stiftgehaeuse Kodierung D	D	1
C	1-1718491-3	D	1	PBT-GF30	YELLOW gelb	SECONDARY LOCKING zweite Kontaktsicherung	C	2
			1	PBT-GF10	LIGHT BLUE lichtblau	TAB HOUSING CODE C Stiftgehaeuse Kodierung C	D	1
B	1-1718491-2	D	1	PBT-GF30	YELLOW gelb	SECONDARY LOCKING zweite Kontaktsicherung	C	2
			1	PBT-GF10	DUSTY GREY staubgrau	TAB HOUSING CODE B Stiftgehaeuse Kodierung B	D	1
A	1-1718491-1	D	1	PBT-GF30	YELLOW gelb	SECONDARY LOCKING zweite Kontaktsicherung	C	2
			1	PBT-GF10	BLACK schwarz	TAB HOUSING CODE A Stiftgehaeuse Kodierung A	D	1

CODING A AS SHOWN
Kodierung A wie gezeigt:

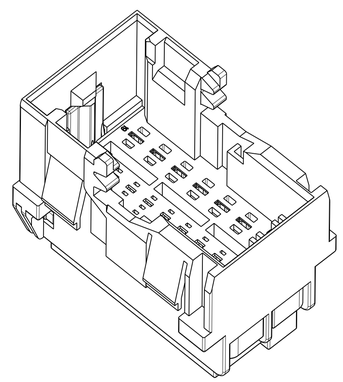

THIS DRAWING IS A CONTROLLED DOCUMENT.

DIMENSIONS: MASSEINHEITEN: mm

TOLERANCES UNLESS OTHERWISE SPECIFIED: ± ACC. TO ISO 8015 ACC. TO DIN 16901-140
1 PLC ±
2 PLC ±
3 PLC ±
ANGLES/WINKEL ±2°

MATERIAL: SEE TABLE siehe Tabelle

FINISH/OBERFLAECHE/FARBE: SEE TABLE siehe Tabelle

DWN 16JUL2004 E. Eltrop
CHK 16JUL2004 Ch. Eberwein
APVD - J. Hass
PRODUCT SPEC PRODUKTSPEZ. 108-18957
APPLICATION SPEC VERARBEITUNGSSPEZ. 114-18663
WEIGHT GEWICHT 22 g

TE Connectivity

NAME 1.5/2.8 MM TAB HOUSING, 25POS
1.5/2.8mm Flachsteckergehaeuse, 25pol.
-

SIZE	CAGE CODE	DRAWING NO ZEICHNUNGS-NR.	RESTRICTED TO NUR FUER
A1	00779	C-1718491	-

CUSTOMER DRAWING /KUNDENZEICHNUNG | SCALE MASSSTAB 2:1 | SHEET BLATT 1 OF VON 1 | REV D1