Chipsmall Limited consists of a professional team with an average of over 10 year of expertise in the distribution of electronic components. Based in Hongkong, we have already established firm and mutual-benefit business relationships with customers from,Europe,America and south Asia,supplying obsolete and hard-to-find components to meet their specific needs.

With the principle of “Quality Parts,Customers Priority,Honest Operation,and Considerate Service”,our business mainly focus on the distribution of electronic components. Line cards we deal with include Microchip,ALPS,ROHM,Xilinx,Pulse,ON,Everlight and Freescale. Main products comprise IC,Modules,Potentiometer,IC Socket,Relay,Connector.Our parts cover such applications as commercial,industrial, and automotives areas.

We are looking forward to setting up business relationship with you and hope to provide you with the best service and solution. Let us make a better world for our industry!

Contact us

Tel: +86-755-8981 8866 Fax: +86-755-8427 6832
Email & Skype: info@chipsmall.com Web: www.chipsmall.com
Address: A1208, Overseas Decoration Building, #122 Zhenhua RD., Futian, Shenzhen, China

THIS DRAWING IS UNPUBLISHED. RELEASED FOR PUBLICATION 20
© COPYRIGHT 20 BY - ALL RIGHTS RESERVED.

LOC	DIST
DY	-

REVISIONS

P	LTR	DESCRIPTION	DATE	DWN	APVD
	C2	REVISED PER ECR-16-011040	2AUG2016	S.W	W.H

NOTES:

1. MATERIAL:
   HOUSING: HIGH TEMP THERMOPLASTIC, UL94 V-0, BLACK
   CONTACT: COPPER ALLOY
   SOLDER PEG: COPPER ALLOY
2. FINISH:
   CONTACT : "A" MIN GOLD PLATING AT MATING SIDE AND 2.54µm MIN TIN PLATING AT SOLDER TAIL WITH 1.27µm MIN NICKEL UNDERPLATING ALL OVER.
   SOLDER PEG: 2.54µm MIN TIN PLATING WITH 1.27µm MIN NICKEL UNDERPLATING ALL OVER.
3. CO-PLANARITY TO BE 0.1mm MAX AFTER 2 PASS REFLOW, PEAK 245 DEGREE CELSIUS

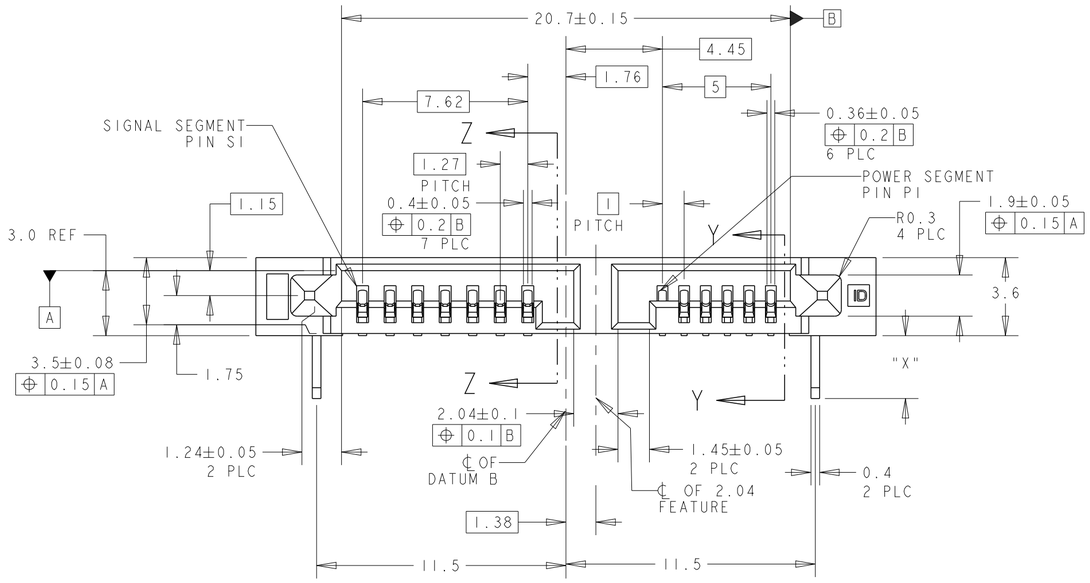

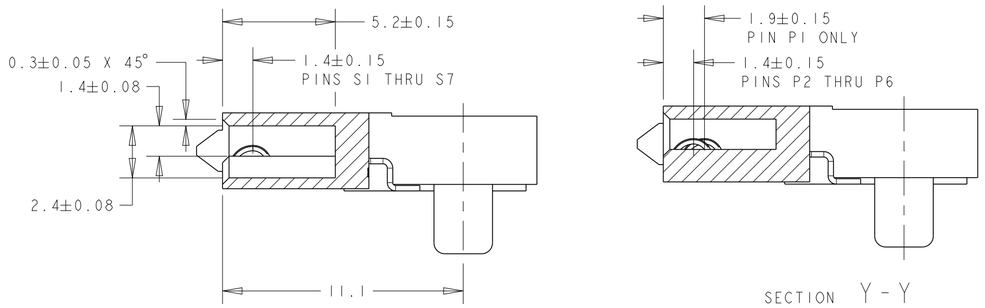

SECTION Z-Z
SCALE 5:1

SECTION Y-Y
SCALE 5:1

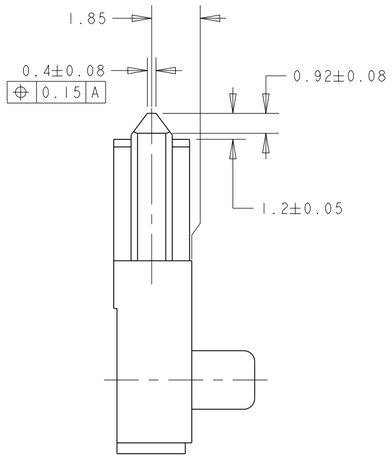

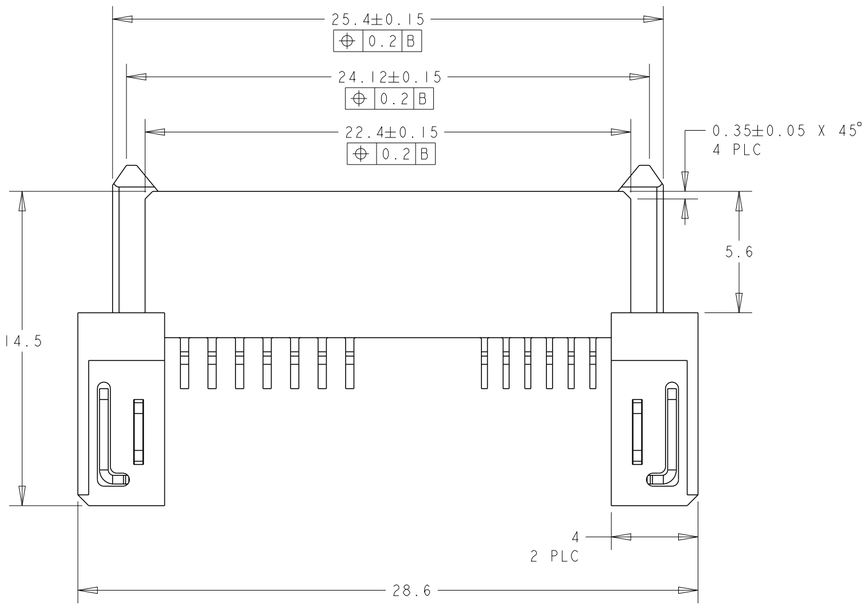

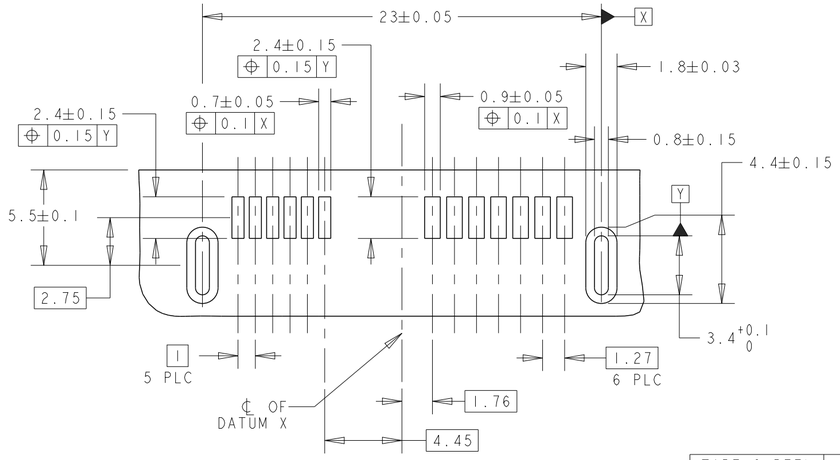

RECOMMENDED PCB LAYOUT

OBSOLETE	TAPE & REEL	2.9	0.76µm	1-1735413-3
			0.38µm	1-1735413-2
			0.05µm	1-1735413-1
	TRAY	1.8	0.76µm	1735413-3
			0.38µm	1735413-2
			0.05µm	1735413-1
	PACKAGING TYPE	"X"	"A"	PART NUMBER

THIS DRAWING IS A CONTROLLED DOCUMENT.

DIMENSIONS: mm

TOLERANCES UNLESS OTHERWISE SPECIFIED:
0 PLC ±-
1 PLC ±0.20
2 PLC ±0.20
3 PLC ±0.20
4 PLC ±0.20
ANGLES ±1°

MATERIAL 1 -
FINISH 2 -

DWN KW YAP 09SEP2007
CHK SF LEONG
APVD SF LEONG
PRODUCT SPEC 108-51075
APPLICATION SPEC -
WEIGHT -

TE Connectivity

NAME - SLIMLINE SATA RECEPTACLE 7P+6P RIGHT ANGLE, SMT

SIZE	CAGE CODE	DRAWING NO	RESTRICTED TO
A2	00779	C-1735413	-

CUSTOMER DRAWING SCALE 4:1 SHEET 1 OF 1 REV C2