Chipsmall Limited consists of a professional team with an average of over 10 year of expertise in the distribution of electronic components. Based in Hongkong, we have already established firm and mutual-benefit business relationships with customers from,Europe,America and south Asia,supplying obsolete and hard-to-find components to meet their specific needs.

With the principle of “Quality Parts,Customers Priority,Honest Operation,and Considerate Service”,our business mainly focus on the distribution of electronic components. Line cards we deal with include Microchip,ALPS,ROHM,Xilinx,Pulse,ON,Everlight and Freescale. Main products comprise IC,Modules,Potentiometer,IC Socket,Relay,Connector.Our parts cover such applications as commercial,industrial, and automotives areas.

We are looking forward to setting up business relationship with you and hope to provide you with the best service and solution. Let us make a better world for our industry!

Contact us

Tel: +86-755-8981 8866 Fax: +86-755-8427 6832
Email & Skype: info@chipsmall.com Web: www.chipsmall.com
Address: A1208, Overseas Decoration Building, #122 Zhenhua RD., Futian, Shenzhen, China

THIS DRAWING IS UNPUBLISHED. RELEASED FOR PUBLICATION -,- .
© COPYRIGHT 2011 BY TYCO ELECTRONICS CORPORATION. ALL RIGHTS RESERVED.

LOC	DIST
DW	—

REVISIONS

P	LTR	DESCRIPTION	DATE	DWN	APVD
	D2	REVISED (ECR-12-009951) DRAWING REDRAW & RELEASE P/N 1775855-3	31JUL'12	E.L.	W.K.

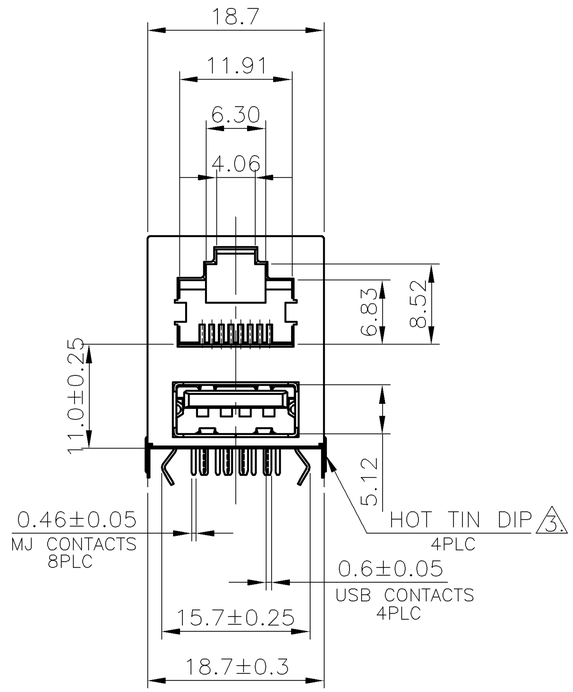

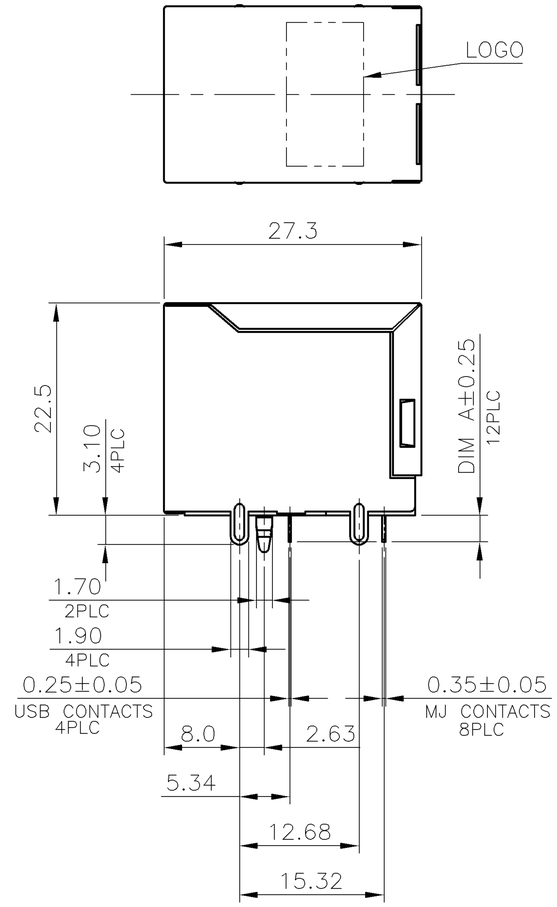

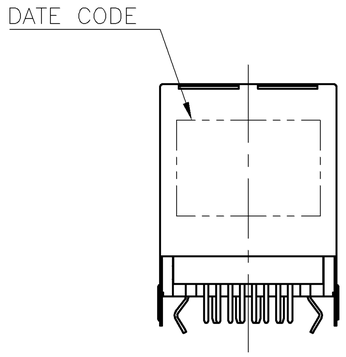

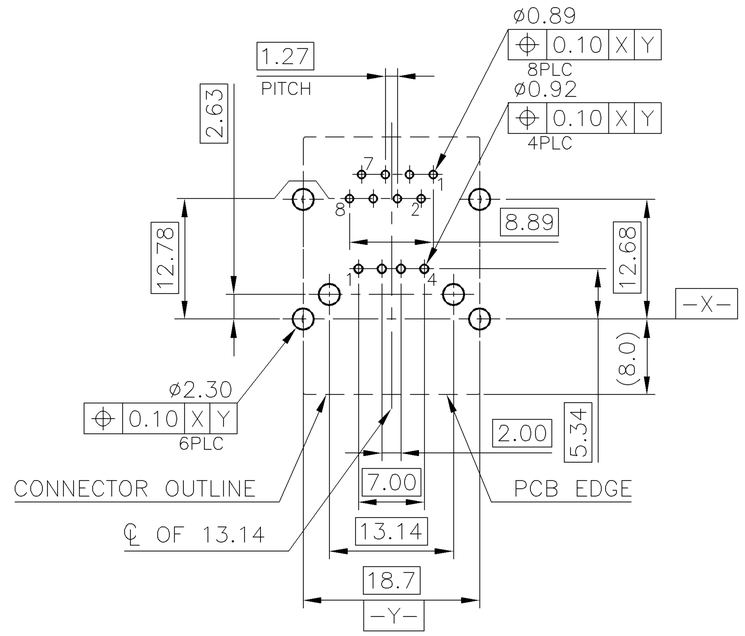

RECOMMENDED PCB LAYOUT
RECOMMENDED PCB THICKNESS: 1.6mm
TOLERANCE: ±0.05 (TOP VIEW)

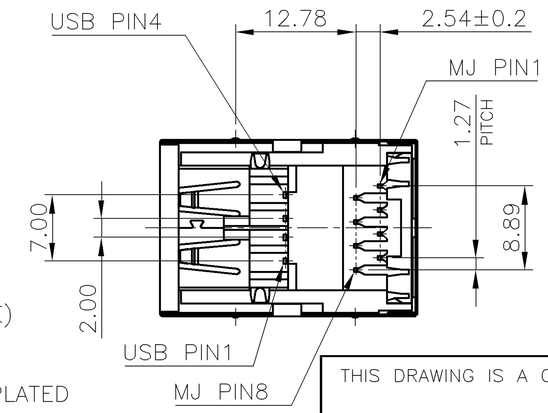

NOTE:

1. MATERIAL:
   1.1 MJ HOUSING: PBT, WITH 30% GF, UL94V-0, COLOR: SEE TABLE.
   1.2 MJ CONTACTS: PHOSPHOR BRONZE.
   1.3 MJ SHIELD: BRASS.
   1.4 USB HOUSING: PBT, UL94V-0, COLOR: SEE TABLE.
   1.5 USB CONTACTS: BRASS.
   1.6 USB SHIELD: SPCC.
2. FINISH:
   2.1 MJ CONTACTS: SELECTIVE GOLD PLATED (SEE TABLE) ON CONTACT AREA, GOLD FLASH ON SOLDER TAILS, 1.27um [50u"] MIN. NICKEL UNDERPLATED OVERALL.
   2.2 MJ SHIELD: 0.508um [20u"] MIN. NICKEL PLATED.
   2.3 USB CONTACT: SELECTIVE GOLD PLATED (SEE TABLE) ON CONTACT AREA, 2.54um [100u"] MIN. BRIGHT-TIN PLATED ON SOLDER TAILS, 1.27um [50u"] MIN. NICKEL UNDERPLATED OVERALL.
   2.4 USB SHIELD: 2.032um [80u"] MIN. NICKEL PLATED.
3. HOT TIN DIP ON SHELL'S LEGS.
4. WAVE SOLDER CAPABLE TO 265°C PER TE CONNECTIVITY SPEC. 109-202, CONDITION B.

WEIGHT (gram)	HOT TIN DIP ON SHELL'S LEGS	DIM A	HOUSING COLOR	MIN. GOLD THICKNESS	PART NUMBER
12.61	WITHOUT HTD	2.8	BLACK	0.762um [30u"]	3-1775855-1
			COOL GRAY 1C	GOLD FLASH	2-1775855-2
			BLACK	GOLD FLASH	2-1775855-1
	WITH HTD 3		BLACK	0.762um [30u"]	1-1775855-1
		2.6	BLACK	GOLD FLASH	1775855-3
		2.8	GOOL GRAY 1C	GOLD FLASH	1775855-2
			BLACK	GOLD FLASH	1775855-1

THIS DRAWING IS A CONTROLLED DOCUMENT.

DIMENSIONS: mm

TOLERANCES UNLESS OTHERWISE SPECIFIED:

0 PLC	± -
1 PLC	± 0.3
2 PLC	± 0.2
3 PLC	± 0.15
4 PLC	± -
ANGLES	± 3°

MATERIAL: SEE NOTE
FINISH: SEE NOTE

DWN B. HSING 12JUN2009
CHK S. CHIEN 12JUN2009
APVD W. KODAMA 12JUN2009
PRODUCT SPEC 108-57802
APPLICATION SPEC —
WEIGHT SEE TABLE
CUSTOMER DRAWING

TE Connectivity

NAME: MODULAR JACK, RJ45, STACKED OVER, USB CONN., DIP TYPE

SIZE	CAGE CODE	DRAWING NO	RESTRICTED TO
A3	00779	C-1775855	—

SCALE — SHEET 1 OF 5 REV D2

THIS DRAWING IS UNPUBLISHED. RELEASED FOR PUBLICATION -,- .
© COPYRIGHT 2011 BY TYCO ELECTRONICS CORPORATION. ALL RIGHTS RESERVED.

LOC	DIST
DW	—

REVISIONS

P	LTR	DESCRIPTION	DATE	DWN	APVD
		SEE SHEET 1.			

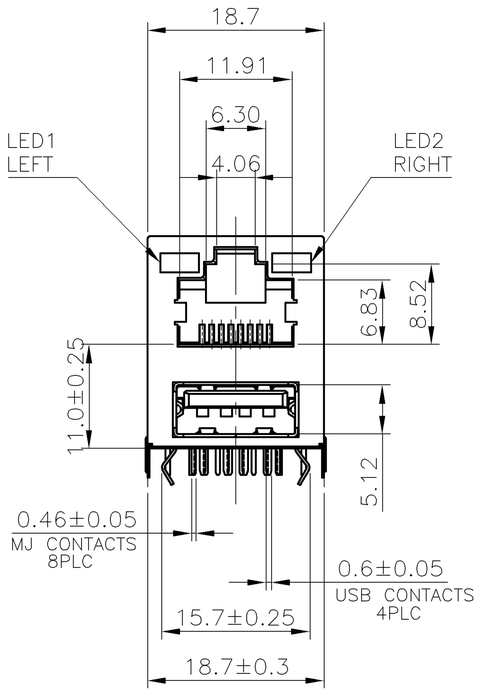

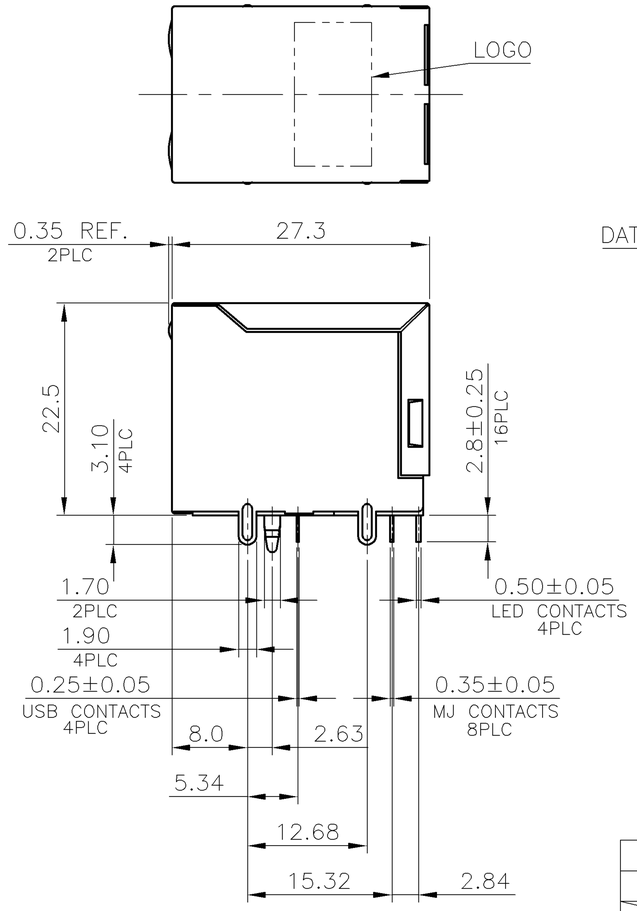

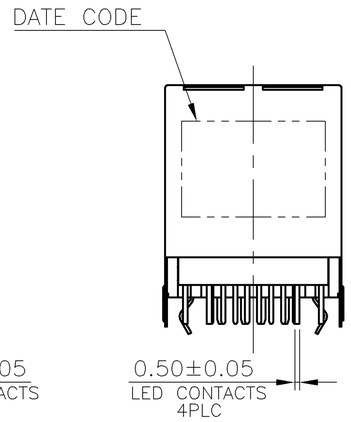

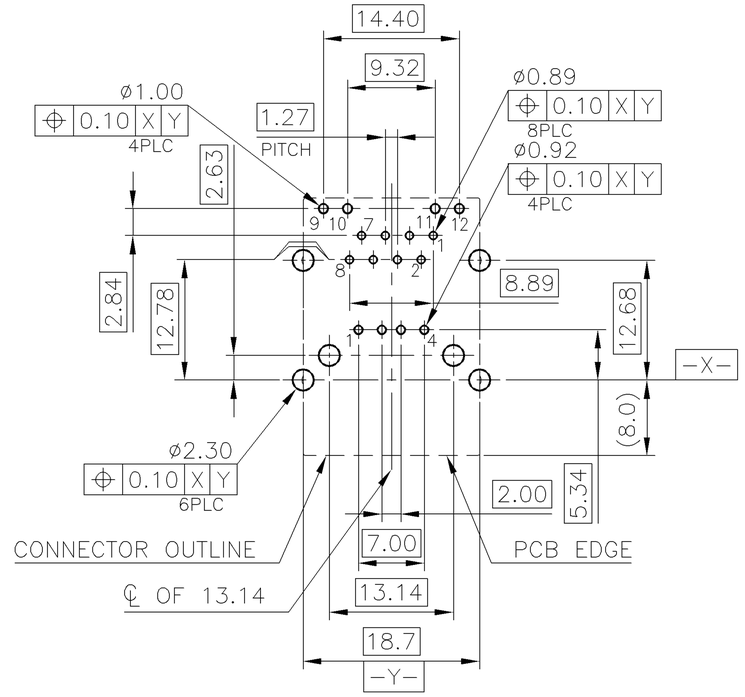

RECOMMENDED PCB LAYOUT
RECOMMENDED PCB THICKNESS: 1.6mm
TOLERANCE: ±0.05 (TOP VIEW)

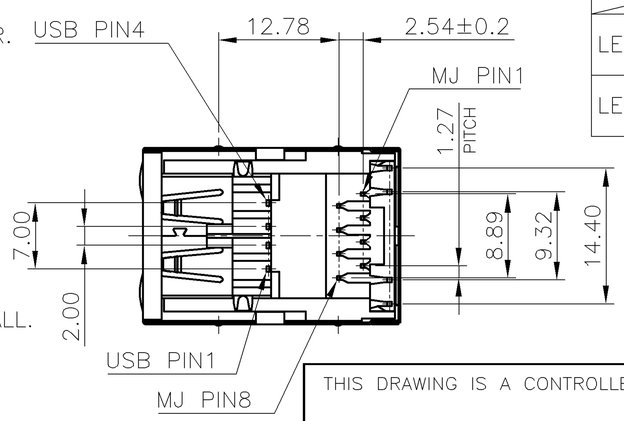

FOR 4-1775855-1			
LED ELECTRICAL CHARACTERISTIC			
	NODE	COLOR	
LED LEFT	9(+) 10(-)	ORANGE	9 —▷|— 10
	9(-) 10(+)	GREEN	9 —|◁— 10
LED RIGHT	11(+) 12(-)	ORANGE	11 —▷|— 12
	11(-) 12(+)	GREEN	11 —|◁— 12

FOR 4-1775855-2			
LED ELECTRICAL CHARACTERISTIC			
	NODE	COLOR	
LED LEFT	9(+) 10(-)	GREEN	9 —▷|— 10
	9(-) 10(+)	ORANGE	9 —|◁— 10
LED RIGHT	11(+) 12(-)	GREEN	11 —▷|— 12

WEIGHT (gram)	LEFT	RIGHT	PART NUMBER
	LED COLORS		
13.11	GREEN/ORANGE	GREEN	4-1775855-2
	ORANGE/GREEN	ORANGE/GREEN	4-1775855-1

NOTE:

1. MATERIAL:
   1.1 MJ HOUSING & LED COVER: PBT, WITH 30% GF, UL94V-0, BLACK COLOR.
   1.2 MJ CONTACTS: PHOSPHOR BRONZE.
   1.3 MJ SHIELD: BRASS.
   1.4 LED SOLDER TAIL: EPOXY, STEEL.
   1.5 USB HOUSING: PBT, UL94V-0, BLACK COLOR.
   1.6 USB CONTACTS: BRASS.
   1.7 USB SHIELD: SPCC.
2. FINISH:
   2.1 MJ CONTACTS:
   GOLD FLASH PLATED ON CONTACT AREA,
   GOLD FLASH ON SOLDER TAILS,
   1.27um [50u"] MIN. NICKEL UNDERPLATED OVERALL.
   2.2 MJ SHIELD: 0.508um [20u"] MIN. NICKEL PLATED.
   2.3 LED SOLDER TAIL:
   1.02um [40u"] COPPER UNDERPLATED OVERALL.
   1.27um [50u"] NICKEL OVERALL.
   1.27um [50u"] SILVER ON BONDING AREA.
   2.54um [100u"] BRIGHT-TIN ON SOLDER AREA.
   2.4 USB CONTACT: GOLD FLASH PLATED ON CONTACT AREA,
   2.54um [100u"] MIN. BRIGHT-TIN PLATED ON SOLDER TAILS,
   1.27um [50u"] MIN. NICKEL UNDERPLATED OVERALL.
   2.5 USB SHIELD: 2.032um [80u"] MIN. NICKEL PLATED.
3. WAVE SOLDER CAPABLE TO 265°C PER TE CONNECTIVITY SPEC. 109-202, CONDITION B.

THIS DRAWING IS A CONTROLLED DOCUMENT.

DIMENSIONS: mm

TOLERANCES UNLESS OTHERWISE SPECIFIED:

0 PLC	± -
1 PLC	± 0.3
2 PLC	± 0.2
3 PLC	± 0.15
4 PLC	± -
ANGLES	± 3°

MATERIAL -
FINISH -

DWN -
CHK -
APVD -
PRODUCT SPEC -
APPLICATION SPEC -
WEIGHT -

TE Connectivity

NAME
MODULAR JACK, RJ45, STACKED OVER, USB CONN., DIP TYPE

SIZE	CAGE CODE	DRAWING NO	RESTRICTED TO
A3	00779	C-1775855	—

CUSTOMER DRAWING | SCALE — | SHEET 2 OF 5 | REV D2

THIS DRAWING IS UNPUBLISHED. RELEASED FOR PUBLICATION -,- .
© COPYRIGHT 2011 BY TYCO ELECTRONICS CORPORATION. ALL RIGHTS RESERVED.

LOC	DIST
DW	—

REVISIONS

P	LTR	DESCRIPTION	DATE	DWN	APVD
		SEE SHEET 1.			

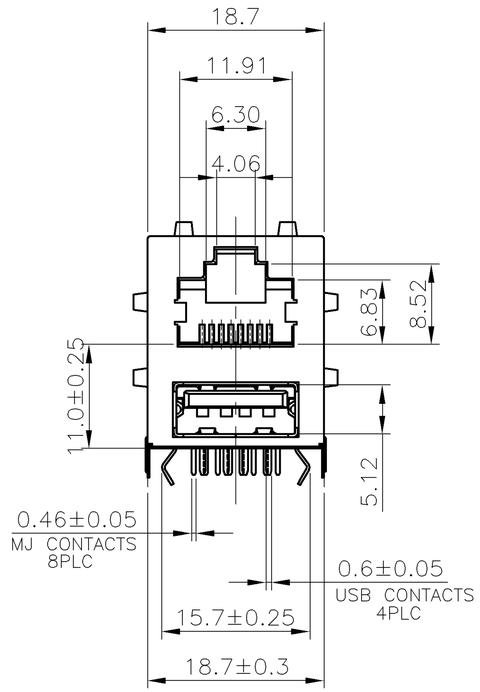

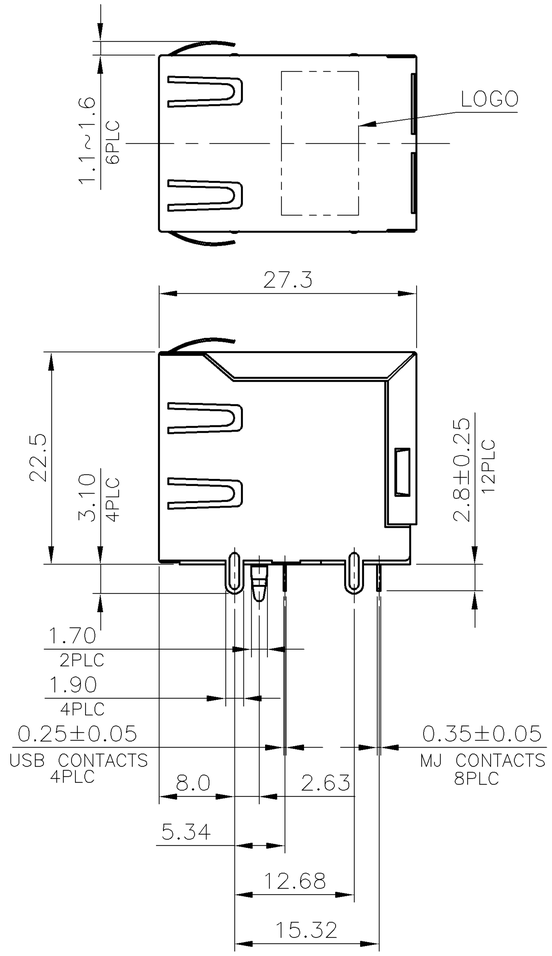

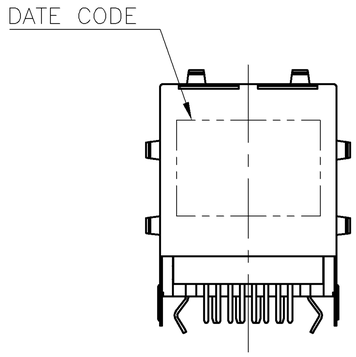

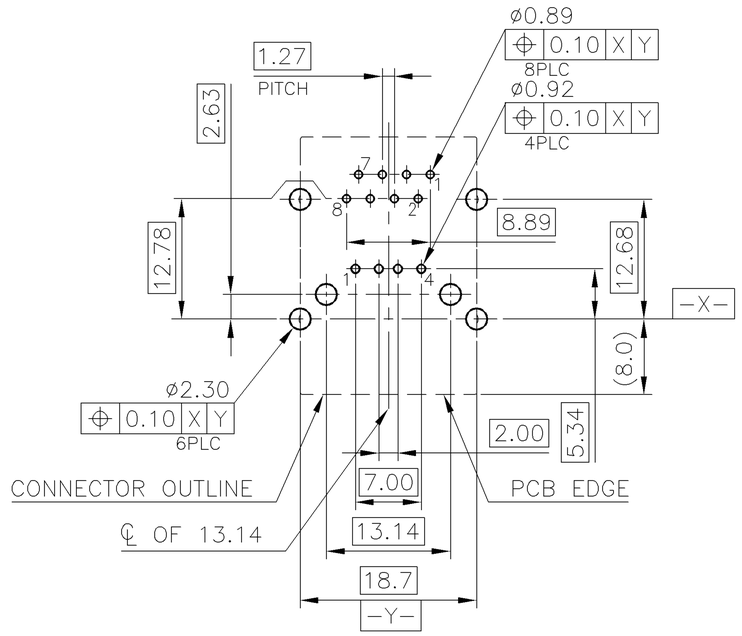

RECOMMENDED PCB LAYOUT
RECOMMENDED PCB THICKNESS: 1.6mm
TOLERANCE: ±0.05 (TOP VIEW)

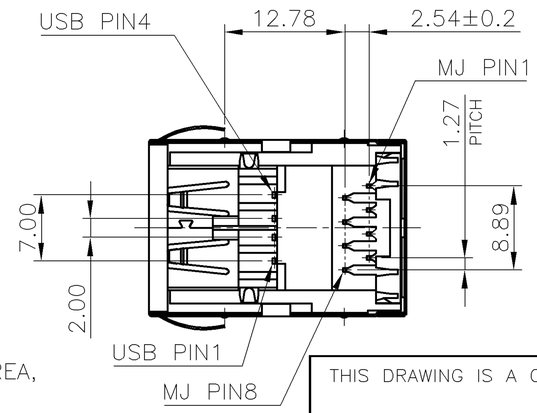

NOTE:

1. MATERIAL:
   1.1 MJ HOUSING: PBT, WITH 30% GF, UL94V-0, COLOR: SEE TABLE.
   1.2 MJ CONTACTS: PHOSPHOR BRONZE.
   1.3 MJ SHIELD: BRASS.
   1.4 USB HOUSING: PBT, UL94V-0, COLOR: SEE TABLE.
   1.5 USB CONTACTS: BRASS.
   1.6 USB SHIELD: SPCC.
2. FINISH:
   2.1 MJ CONTACTS: GOLD FLASH PLATED ON CONTACT AREA, GOLD FLASH ON SOLDER TAILS, 1.27um [50u"] MIN. NICKEL UNDERPLATED OVERALL.
   2.2 MJ SHIELD: 0.508um [20u"] MIN. NICKEL PLATED.
   2.3 USB CONTACT: GOLD FLASH PLATED ON CONTACT AREA, 2.54um [100u"] MIN. BRIGHT-TIN PLATED ON SOLDER TAILS, 1.27um [50u"] MIN. NICKEL UNDERPLATED OVERALL.
   2.4 USB SHIELD: 2.032um [80u"] MIN. NICKEL PLATED.
3. WAVE SOLDER CAPABLE TO 265°C PER TE CONNECTIVITY SPEC. 109-202, CONDITION B.

WEIGHT (gram)	PART NUMBER
12.69	5-1775855-1

THIS DRAWING IS A CONTROLLED DOCUMENT.

DIMENSIONS: mm

TOLERANCES UNLESS OTHERWISE SPECIFIED:

0 PLC	± -
1 PLC	± 0.3
2 PLC	± 0.2
3 PLC	± 0.15
4 PLC	± -
ANGLES	± 3°

MATERIAL: -
FINISH: -

DWN -
CHK -
APVD -
PRODUCT SPEC -
APPLICATION SPEC -
WEIGHT -

TE Connectivity

NAME
MODULAR JACK, RJ45, STACKED OVER, USB CONN., DIP TYPE

SIZE	CAGE CODE	DRAWING NO	RESTRICTED TO
A3	00779	C-1775855	—

CUSTOMER DRAWING | SCALE — | SHEET 3 OF 5 | REV D2

1470-19 (1/08)

THIS DRAWING IS UNPUBLISHED. RELEASED FOR PUBLICATION -,- .
© COPYRIGHT 2011 BY TYCO ELECTRONICS CORPORATION. ALL RIGHTS RESERVED.

LOC	DIST
DW	—

REVISIONS

P	LTR	DESCRIPTION	DATE	DWN	APVD
		SEE SHEET 1.			

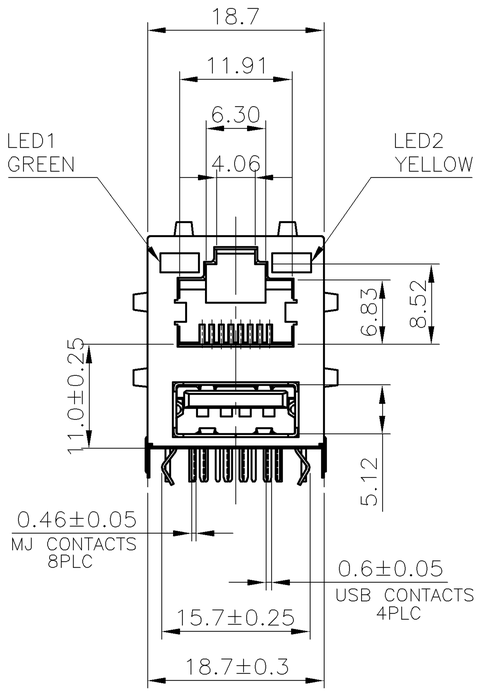

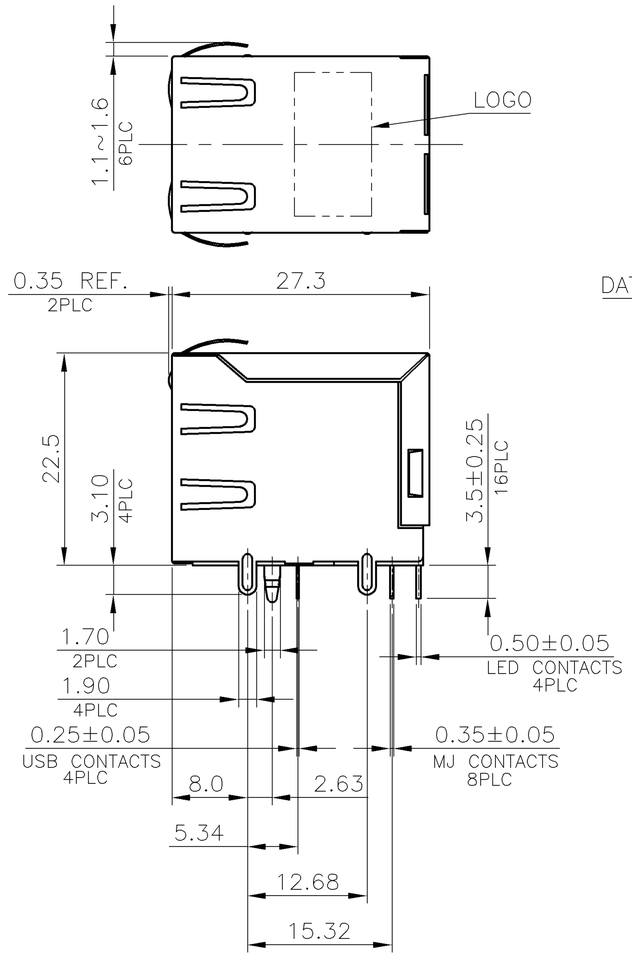

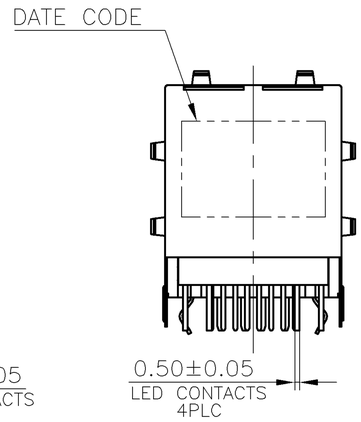

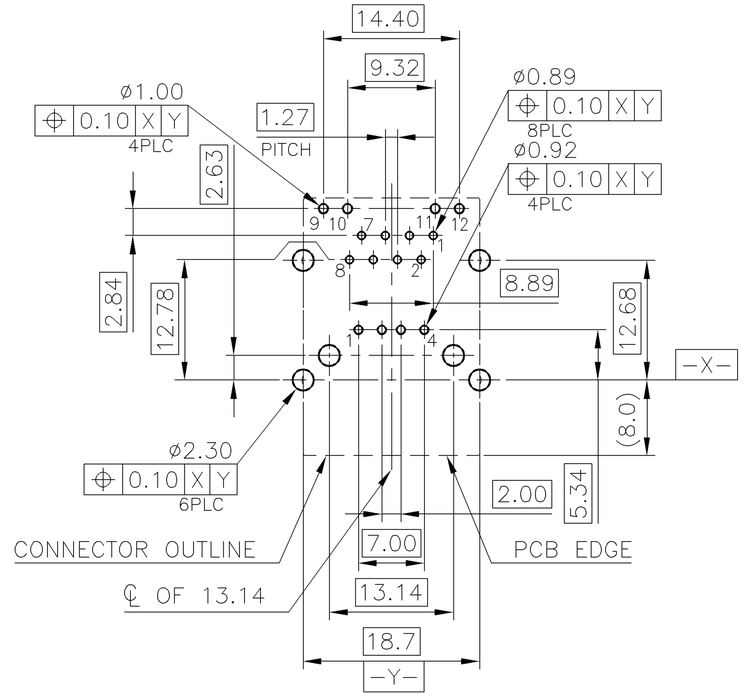

RECOMMENDED PCB LAYOUT
RECOMMENDED PCB THICKNESS: 1.6mm
TOLERANCE: ±0.05 (TOP VIEW)

NOTE:

1. MATERIAL:
   1.1 MJ HOUSING & LED COVER: PBT, WITH 30% GF, UL94V-0, BLACK COLOR.
   1.2 MJ CONTACTS: PHOSPHOR BRONZE.
   1.3 MJ SHIELD: BRASS.
   1.4 LED SOLDER TAIL: EPOXY, STEEL.
   1.5 USB HOUSING: PBT, UL94V-0, BLACK COLOR.
   1.6 USB CONTACTS: BRASS.
   1.7 USB SHIELD: SPCC.
2. FINISH:
   2.1 MJ CONTACTS:
      SELECTIVE GOLD PLATED (SEE TABLE) ON CONTACT AREA,
      GOLD FLASH ON SOLDER TAILS,
      1.27um [50u"] MIN. NICKEL UNDERPLATED OVERALL.
   2.2 MJ SHIELD: 0.508um [20u"] MIN. NICKEL PLATED.
   2.3 LED SOLDER TAIL:
      1.02um [40u"] COPPER UNDERPLATED OVERALL.
      1.27um [50u"] NICKEL OVERALL.
      1.27um [50u"] SILVER ON BONDING AREA.
      2.54um [100u"] BRIGHT-TIN ON SOLDER AREA.
   2.4 USB CONTACT: SELECTIVE GOLD PLATED (SEE TABLE) ON CONTACT AREA,
      2.54um [100u"] MIN. BRIGHT-TIN PLATED ON SOLDER TAILS,
      1.27um [50u"] MIN. NICKEL UNDERPLATED OVERALL.
   2.5 USB SHIELD: 2.032um [80u"] MIN. NICKEL PLATED.
3. WAVE SOLDER CAPABLE TO 265°C PER TE CONNECTIVITY SPEC. 109-202, CONDITION B.

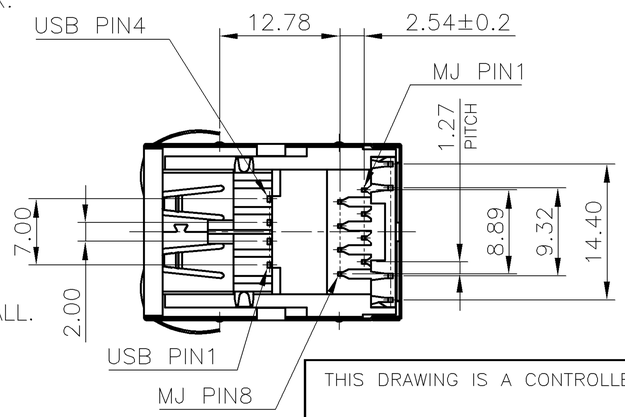

LED ELECTRICAL CHARACTERISTIC			
NO.	NODE	COLOR	
LED1	9(+) 10(-)	GREEN	9 —▷|— 10
LED2	11(+) 12(-)	YELLOW	11 —▷|— 12

WEIGHT (gram)	MIN. GOLD THICKNESS	PART NUMBER
12.90	0.762um [30u"]	6-1775855-3
	GOLD FLASH	6-1775855-1

THIS DRAWING IS A CONTROLLED DOCUMENT.

DIMENSIONS: mm

TOLERANCES UNLESS OTHERWISE SPECIFIED:

0 PLC	± -
1 PLC	± 0.3
2 PLC	± 0.2
3 PLC	± 0.15
4 PLC	± -
ANGLES	± 3°

MATERIAL: -
FINISH: -

DWN -
CHK -
APVD -
PRODUCT SPEC -
APPLICATION SPEC -
WEIGHT -

TE Connectivity

NAME
MODULAR JACK, RJ45, STACKED OVER, USB CONN., DIP TYPE

SIZE	CAGE CODE	DRAWING NO	RESTRICTED TO
A3	00779	C-1775855	—

CUSTOMER DRAWING | SCALE — | SHEET 4 OF 5 | REV D2

THIS DRAWING IS UNPUBLISHED. RELEASED FOR PUBLICATION – , – .
© COPYRIGHT 2011 BY TYCO ELECTRONICS CORPORATION. ALL RIGHTS RESERVED.

LOC	DIST
DW	–

REVISIONS

P	LTR	DESCRIPTION	DATE	DWN	APVD
		SEE SHEET 1.			

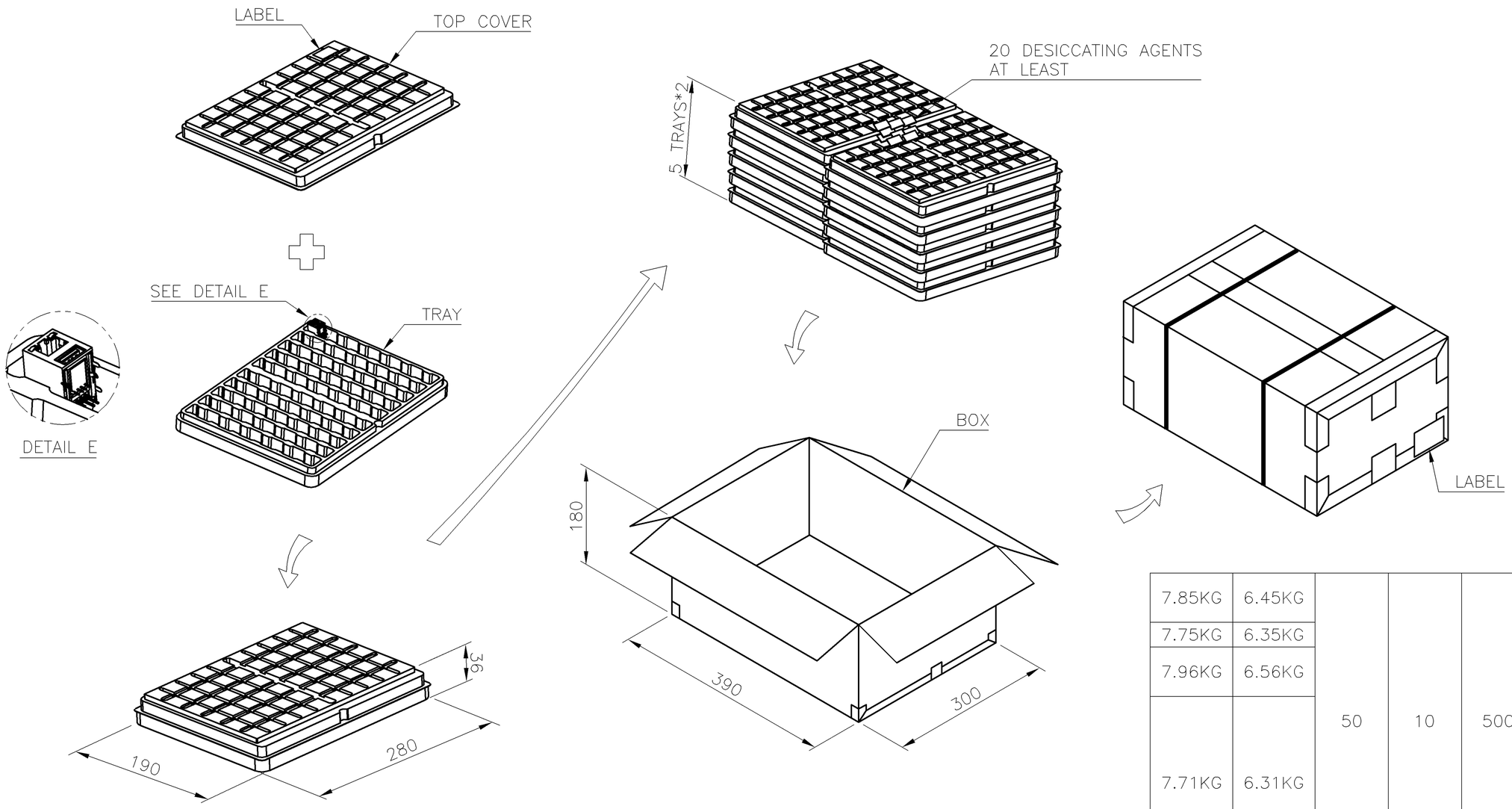

GROSS WEIGHT	NET WEIGHT	PCS/ TRAY	TRAY/ BOX	PCS/ BOX	PART NUMBER
7.85KG	6.45KG	50	10	500	6–1775855–3
					6–1775855–1
7.75KG	6.35KG				5–1775855–1
7.96KG	6.56KG				4–1775855–2
					4–1775855–1
7.71KG	6.31KG				3–1775855–1
					2–1775855–2
					2–1775855–1
					1–1775855–1
					1775855–3
					1775855–2
					1775855–1

NOTES:
1. MATERIAL:
   TRAY: PVC.
   BOX: CORRUGATED FIBER.
2. DIMENSION: SEE DRAWING
3. QUANTITY: SEE TABLE
4. WEIGHT: SEE TABLE

THIS DRAWING IS A CONTROLLED DOCUMENT.

DIMENSIONS: mm

TOLERANCES UNLESS OTHERWISE SPECIFIED:

0 PLC	± –
1 PLC	± 0.3
2 PLC	± 0.2
3 PLC	± 0.15
4 PLC	± –
ANGLES	± 3°

MATERIAL –

FINISH –

DWN –
CHK –
APVD –
PRODUCT SPEC –
APPLICATION SPEC –
WEIGHT –

TE Connectivity

NAME
MODULAR JACK, RJ45, STACKED OVER, USB CONN., DIP TYPE

SIZE	CAGE CODE	DRAWING NO	RESTRICTED TO
A3	00779	C–1775855	–

CUSTOMER DRAWING | SCALE – | SHEET 5 OF 5 | REV D2