Chipsmall Limited consists of a professional team with an average of over 10 year of expertise in the distribution of electronic components. Based in Hongkong, we have already established firm and mutual-benefit business relationships with customers from,Europe,America and south Asia,supplying obsolete and hard-to-find components to meet their specific needs.

With the principle of “Quality Parts,Customers Priority,Honest Operation,and Considerate Service”,our business mainly focus on the distribution of electronic components. Line cards we deal with include Microchip,ALPS,ROHM,Xilinx,Pulse,ON,Everlight and Freescale. Main products comprise IC,Modules,Potentiometer,IC Socket,Relay,Connector.Our parts cover such applications as commercial,industrial, and automotives areas.

We are looking forward to setting up business relationship with you and hope to provide you with the best service and solution. Let us make a better world for our industry!

Contact us

Tel: +86-755-8981 8866 Fax: +86-755-8427 6832
Email & Skype: info@chipsmall.com Web: www.chipsmall.com
Address: A1208, Overseas Decoration Building, #122 Zhenhua RD., Futian, Shenzhen, China

THIS DRAWING IS UNPUBLISHED. RELEASED FOR PUBLICATION -,- .
© COPYRIGHT - By - ALL RIGHTS RESERVED.

LOC	DIST
FT	0

REVISIONS

P	LTR	DESCRIPTION	DATE	DWN	APVD
	P	REVISED PER ECO-11-004917	11MAR11	RK	HMR

MATERIAL:
HOUSING: POLYAMIDE 6/6, GRAY, HANDLE BLACK.
INSERTS: BRASS, TIN PLATED.
CONTACTS FOR FUSES: STAINLESS SPRING STEEL.
SCREWS: STEEL, ZINC PLATED, NON-HEXAVALENT CHROMATE (CHROME III).

VOLTAGE RATING:
FUSE HOLDERS: 250V
TERMINAL BLOCKS: 400V

CURRENT RATING:
FUSE HOLDERS: 16A
TERMINAL BLOCKS: 34A

WIRE RANGE: 10-24 AWG (WIRE PROTECTOR)
WIRE RANGE: 8-22 AWG (TUNNEL CONNECTIION)

1 LOCATING FEATURE IS NOT APPLICABLE TO 1 POSITION PART.

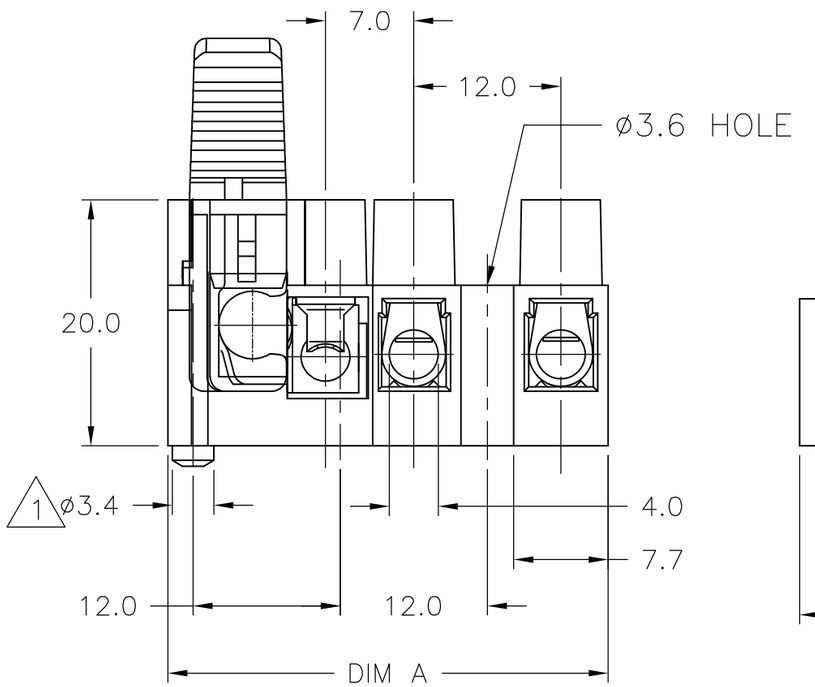

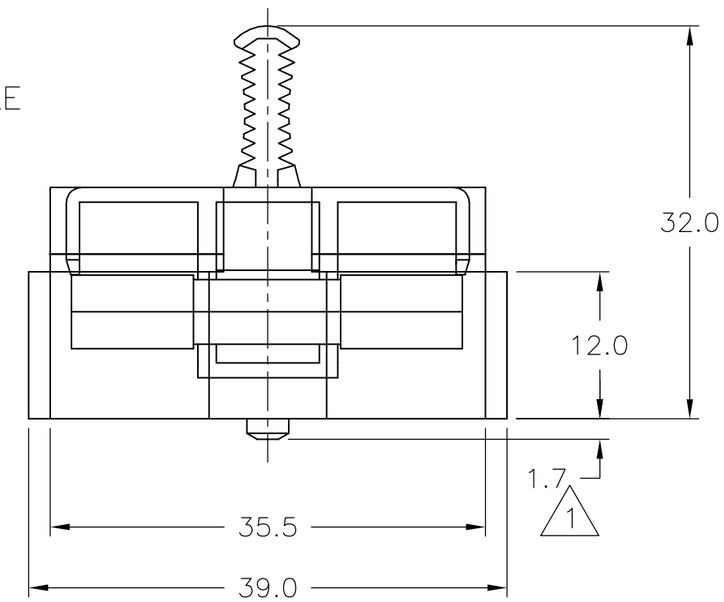

36.0	1003SI/3EDS	1776309-4
DIM A	CATALOG NO.	PART NUMBER
WIRE PROTECTOR GROUNDED		

36.0	1003SI/3E	1776309-3
DIM A	CATALOG NO.	PART NUMBER
TUNNEL CONNECTION GROUNDED		

24.0	1003SI/2DS	1776309-2
18.7	1003SI/1DS	1776309-1
DIM A	CATALOG NO.	PART NUMBER
WIRE PROTECTOR		

	60.0	1003SI/5	1-1776309-5
	48.0	1003SI/4	1-1776309-4
	36.0	1003SI/3	1-1776309-3
	24.0	1003SI/2	1-1776309-2
1	18.7	1003SI/1	1-1776309-1
	DIM A	CATALOG NO.	PART NUMBER
	TUNNEL CONNECTION		

THIS DRAWING IS A CONTROLLED DOCUMENT.

DIMENSIONS: mm

TOLERANCES UNLESS OTHERWISE SPECIFIED:
0 PLC ± -
1 PLC ± .3
2 PLC ± .25
3 PLC ± -
4 PLC ± -
ANGLES ± -

MATERIAL -
FINISH -

DWN S SCHLEGEL 3/22/05
CHK S YODER 3/22/05
APVD S YODER 3/22/05
PRODUCT SPEC —
APPLICATION SPEC —
WEIGHT —

TE Connectivity

NAME
FUSED TERMINAL BLOCK
1003Si

SIZE	CAGE CODE	DRAWING NO	RESTRICTED TO
A3	00779	C-1776309	—

CUSTOMER DRAWING

SCALE	SHEET	REV
NTS	1 OF 1	P