Chipsmall Limited consists of a professional team with an average of over 10 year of expertise in the distribution of electronic components. Based in Hongkong, we have already established firm and mutual-benefit business relationships with customers from,Europe,America and south Asia,supplying obsolete and hard-to-find components to meet their specific needs.

With the principle of “Quality Parts,Customers Priority,Honest Operation,and Considerate Service”,our business mainly focus on the distribution of electronic components. Line cards we deal with include Microchip,ALPS,ROHM,Xilinx,Pulse,ON,Everlight and Freescale. Main products comprise IC,Modules,Potentiometer,IC Socket,Relay,Connector.Our parts cover such applications as commercial,industrial, and automotives areas.

We are looking forward to setting up business relationship with you and hope to provide you with the best service and solution. Let us make a better world for our industry!

Contact us

Tel: +86-755-8981 8866 Fax: +86-755-8427 6832
Email & Skype: info@chipsmall.com Web: www.chipsmall.com
Address: A1208, Overseas Decoration Building, #122 Zhenhua RD., Futian, Shenzhen, China

THIS DRAWING IS UNPUBLISHED. RELEASED FOR PUBLICATION DEC ,2004.
© COPYRIGHT 2004 BY TYCO ELECTRONICS CORPORATION. ALL RIGHTS RESERVED.

LOC	DIST
E	B

REVISIONS

P	LTR	DESCRIPTION	DATE	DWN	APVD
	B1	ECO-10-021614	20OCT10	TitongSeng	

NOTES

1. SINGLE PACK IN ACCORDANCE WITH AMP SPEC 107-3275
2. 50 TRAY PACK IN ACCORDANCE WITH AMP SPEC 107-3275
3. Au PLATING OVER Cu PLATING
4. Ag PLATING OVER Cu PLATING
5. Ni PLATING OVER Cu PLATING
6. CHARACTERISTICS
   - FREQUENCY RANGE: DC-11.0GHz
   - IMPEDANCE: 50 OHMS
   - WORKING VOLTAGE: 1000V MAX AT SEA LEVEL
   - DIELECTRIC WITHSTAND VOLTAGE: 2500V RMS MAX
   - TEMPERATURE RATE: -55°C TO +165°C
7. MECHANICAL CHARACTERISTICS
   - DURABILITY: 500 CYCLES MIN
8. FOR TECHNICAL DATA REFER TO YOUR LOCAL TYCO ELECTRONICS SALES OFFICE
9. ALL DIMENSIONS ARE NOMINAL FOR REFERENCE ONLY UNLESS OTHERWISE STATED

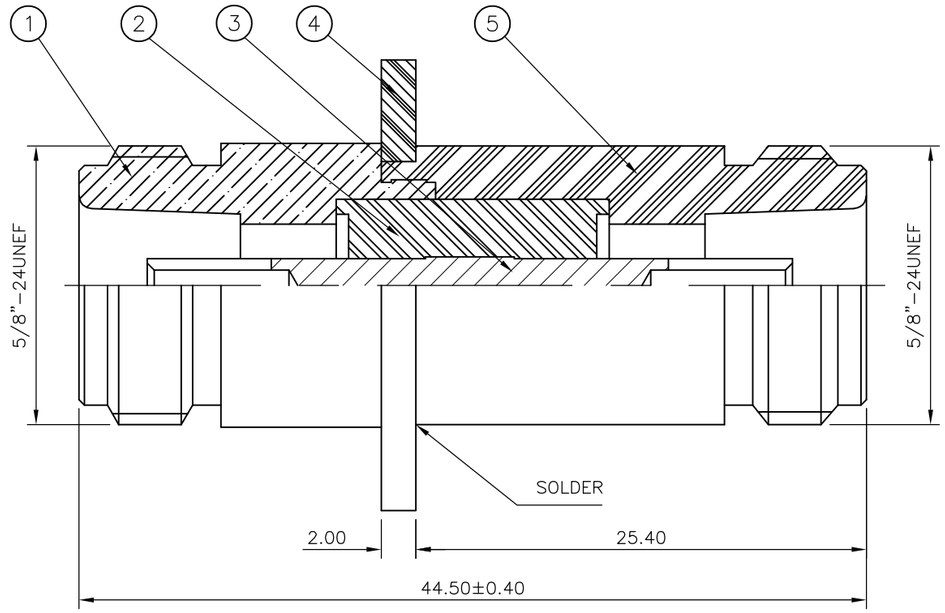

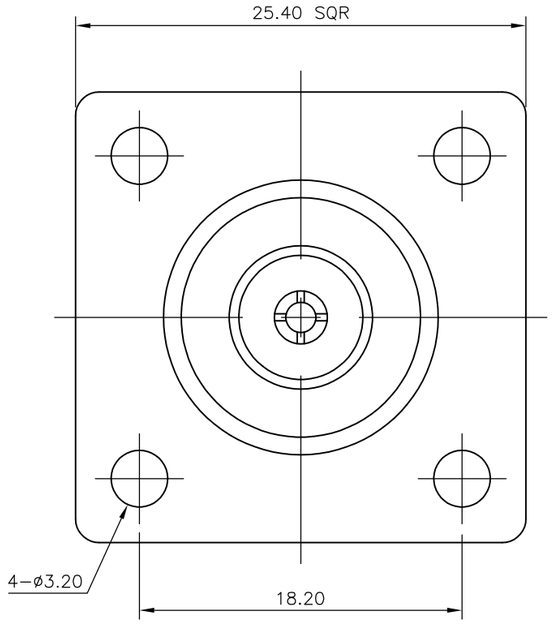

				–	–	1	1	BRASS 5	BODY	5
				1	1	–	–	BRASS 4	BODY	5
				–	–	1	1	BRASS 5	FLANGE	4
				1	1	–	–	BRASS 4	FLANGE	4
				1	1	–	–	BRASS 4	CONTACT	3
				–	–	1	1	BRASS 3	CONTACT	3
				1	1	1	1	PTFE	INSULATOR	2
				–	–	1	1	BRASS 5	BODY	1
				1	1	–	–	BRASS 4	BODY	1
				6--1	1--1	6--0	1--0	MATERIAL	DESCRIPTION	ITEM
				2	1	2	1			
QUANTITY PER ASSY								PARTS LIST		

THIS DRAWING IS A CONTROLLED DOCUMENT.

DIMENSIONS: mm

TOLERANCES UNLESS OTHERWISE SPECIFIED:
0 PLC ± –
1 PLC ± –
2 PLC ± –
3 PLC ± –
4 PLC ± –
ANGLES ± –

MATERIAL: SEE TABLE

FINISH: SEE TABLE

DWN J.SANDWELL 01DEC04
CHK S.PARLOW 01DEC04
APVD F.WHEELER-KING 01DEC04
PRODUCT SPEC —
APPLICATION SPEC —
WEIGHT —

Tyco Electronics

Tyco Electronics Corporation
Bideford, UK, EX39 4HE

NAME: N TYPE ADAPTER PANEL MOUNT JACK
—
—

SIZE	CAGE CODE	DRAWING NO	RESTRICTED TO
A3	00779	C-1814407	—

CUSTOMER DRAWING

SCALE NTS | SHEET 1 OF 1 | REV B1