Chipsmall Limited consists of a professional team with an average of over 10 year of expertise in the distribution of electronic components. Based in Hongkong, we have already established firm and mutual-benefit business relationships with customers from,Europe,America and south Asia,supplying obsolete and hard-to-find components to meet their specific needs.

With the principle of “Quality Parts,Customers Priority,Honest Operation,and Considerate Service”,our business mainly focus on the distribution of electronic components. Line cards we deal with include Microchip,ALPS,ROHM,Xilinx,Pulse,ON,Everlight and Freescale. Main products comprise IC,Modules,Potentiometer,IC Socket,Relay,Connector.Our parts cover such applications as commercial,industrial, and automotives areas.

We are looking forward to setting up business relationship with you and hope to provide you with the best service and solution. Let us make a better world for our industry!

Contact us

Tel: +86-755-8981 8866 Fax: +86-755-8427 6832
Email & Skype: info@chipsmall.com Web: www.chipsmall.com
Address: A1208, Overseas Decoration Building, #122 Zhenhua RD., Futian, Shenzhen, China

THIS DRAWING IS UNPUBLISHED. | RELEASED FOR PUBLICATION
© 2016 COMMSCOPE, INC. CONFIDENTIAL
NOTICE: THESE DRAWINGS AND SPECIFICATIONS ARE THE PROPRIETARY PROPERTY OF COMMSCOPE, INC. AND MAY BE USED ONLY FOR THE SPECIFIC PURPOSE AUTHORIZED IN WRITING BY COMMSCOPE, INC.

REVISIONS

P	LTR	DESCRIPTION	DATE	DWN	APVD
	A	RLSD; ECO-11-010701	31MAY2011	GG	RA
	B	REV; ECO-13-016164	15OCT2013	GG	RA
	C	REV; 40026090MCO	29OCT2015	GG	LS
	D	REV PER BNS_CD_BRAND	01FEB2017	GG	DC

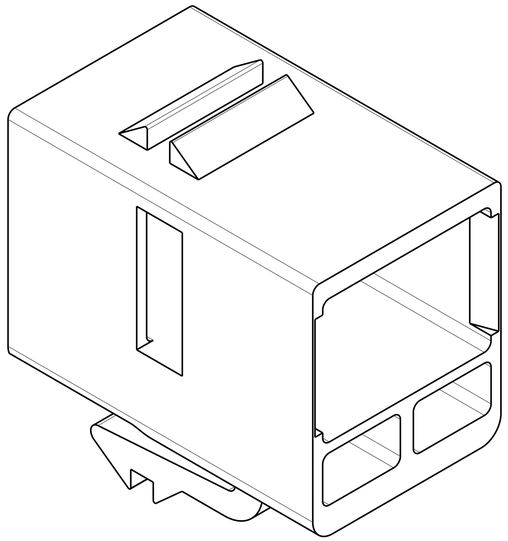

1. MATERIAL: POLYPHENYLENE OXIDE MOLDING COMPOUND.
2. DIMENSIONS SHOWN FOR REFERENCE ONLY.

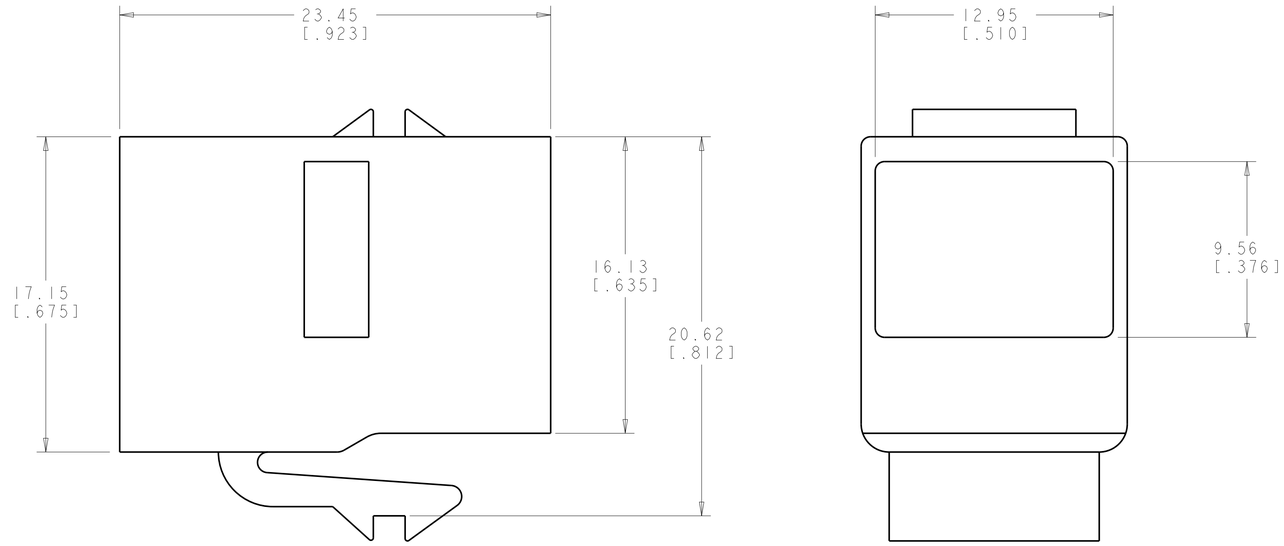

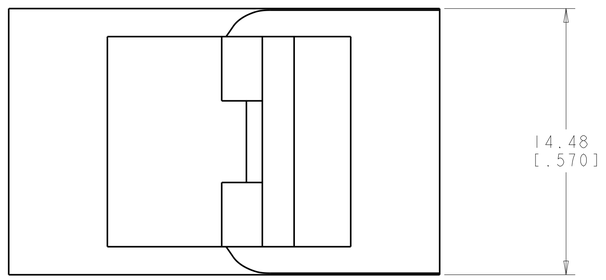

COLOR	PART NUMBER
AQUA	2-2111408-4
ALPINE WHITE	1-2111408-3
BEIGE	1-2111408-2
GREEN	2111408-9
YELLOW	2111408-8
RED	2111408-7
BLUE	2111408-6
ORANGE	2111408-5
GRAY	2111408-4
BLACK	2111408-2
LIGHT ALMOND	2111408-1

THIS DRAWING IS A CONTROLLED DOCUMENT.

DIMENSIONS: MM [INCHES]

TOLERANCES UNLESS OTHERWISE SPECIFIED:
0 PLC ±-
1 PLC ±-
2 PLC ±-
3 PLC ±-
4 PLC ±-
ANGLES ±-

MATERIAL - 1
FINISH - -

DWN G. GARRETT 31MAY2011
CHK R. ASHBY 31MAY2011
APVD R. ASHBY 31MAY2011
PRODUCT SPEC -
APPLICATION SPEC -
WEIGHT -

COMMSCOPE, INC.
NAME JACK HOUSING, SL 110, LC - -
SIZE A1 | CAGE CODE | DRAWING NO C-2111408 | RESTRICTED TO -
Customer Drawing
SCALE 6:1 | SHEET 1 OF 1 | REV D

4805