Chipsmall Limited consists of a professional team with an average of over 10 year of expertise in the distribution of electronic components. Based in Hongkong, we have already established firm and mutual-benefit business relationships with customers from,Europe,America and south Asia,supplying obsolete and hard-to-find components to meet their specific needs.

With the principle of “Quality Parts,Customers Priority,Honest Operation,and Considerate Service”,our business mainly focus on the distribution of electronic components. Line cards we deal with include Microchip,ALPS,ROHM,Xilinx,Pulse,ON,Everlight and Freescale. Main products comprise IC,Modules,Potentiometer,IC Socket,Relay,Connector.Our parts cover such applications as commercial,industrial, and automotives areas.

We are looking forward to setting up business relationship with you and hope to provide you with the best service and solution. Let us make a better world for our industry!

Contact us

Tel: +86-755-8981 8866 Fax: +86-755-8427 6832
Email & Skype: info@chipsmall.com Web: www.chipsmall.com
Address: A1208, Overseas Decoration Building, #122 Zhenhua RD., Futian, Shenzhen, China

THIS DRAWING IS UNPUBLISHED. RELEASED FOR PUBLICATION - ,- .
© COPYRIGHT - By - ALL RIGHTS RESERVED.

PROJECT	PRJ-16-000905033
PART NO.	1-2309646-1
HV DESC	LOW PROF MIMO 2/3/4G+GPS/GNSS 3m SMAP
CUSTOMER	GENERAL MARKET

REVISIONS

P	LTR	DESCRIPTION	DATE	DWN	APVD
	A	NEW RELEASE	26AUG2016	KK	GG

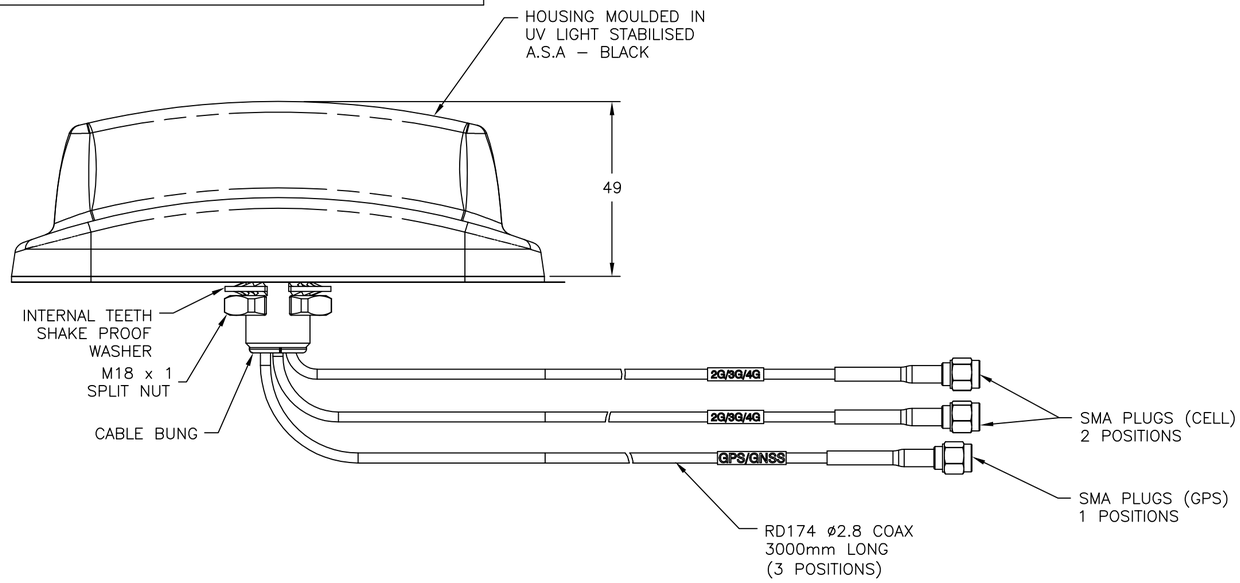

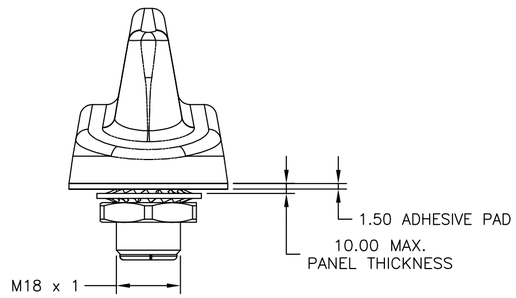

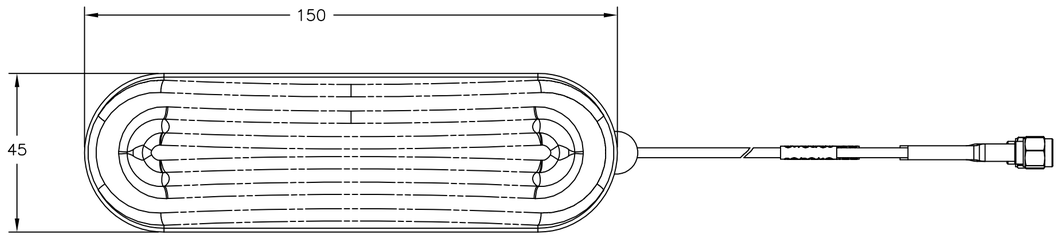

NOTES:

1. ALL MATERIALS SUPPLIED MUST BE RoHS2 (DIRECTIVE 2011/65/EU) COMPLIANT AND MUST NOT CONTAIN ANY SUBSTANCES OF VERY HIGH CONCERN (SVHCs) LISTED UNDER REACH OR POLY-AROMATIC HYDROCARBONS (PAHs), OR PERSISTENT ORGANIC POLLUTANTS (POPs) CONTROLLED BY THE STOCKHOLM CONVENTION.
2. WEIGHT 337.18g.

OPERATING FREQUENCIES:

698 – 960 / 1710 – 2700 MHz x2
1562 – 1612 MHz 26dB LNA

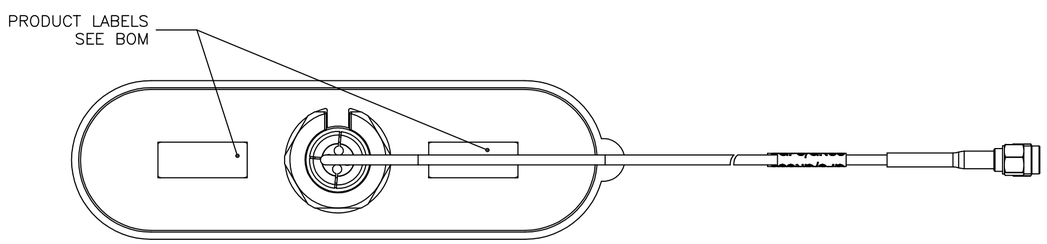

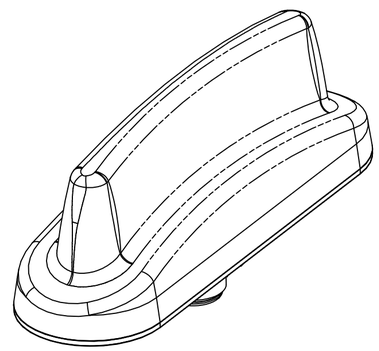

ISO VIEW

TE PN'S	DESCRIPTION	REMARKS
1-2309646-1	LOW PROF MIMO 2/3/4G +GPS/GNSS 3m SMAP	BLACK COLOR

THIS DRAWING IS A CONTROLLED DOCUMENT.

DIMENSIONS: mm

TOLERANCES UNLESS OTHERWISE SPECIFIED:

0 PLC	± 0.5
1 PLC	± 0.1
2 PLC	± 0.2
3 PLC	± –
4 PLC	± –
ANGLES	± 1°

MATERIAL: –

FINISH: –

DWN	KIRAN K	26AUG2016
CHK	GUNASEKHAR G	26AUG2016
APVD	GUNASEKHAR G	26AUG2016
PRODUCT SPEC	—	
APPLICATION SPEC	—	
WEIGHT		

TE Connectivity

NAME: LOW PROF MIMO 2/3/4G +GPS/GNSS 3m SMAP

SIZE	CAGE CODE	DRAWING NO	RESTRICTED TO
A2	00779	C-2309646	—

CUSTOMER DRAWING | SCALE NTS | SHEET 1 OF 1 | REV A

2309646

1471-9 (1/15)