Chipsmall Limited consists of a professional team with an average of over 10 year of expertise in the distribution of electronic components. Based in Hongkong, we have already established firm and mutual-benefit business relationships with customers from,Europe,America and south Asia,supplying obsolete and hard-to-find components to meet their specific needs.

With the principle of “Quality Parts,Customers Priority,Honest Operation,and Considerate Service”,our business mainly focus on the distribution of electronic components. Line cards we deal with include Microchip,ALPS,ROHM,Xilinx,Pulse,ON,Everlight and Freescale. Main products comprise IC,Modules,Potentiometer,IC Socket,Relay,Connector.Our parts cover such applications as commercial,industrial, and automotives areas.

We are looking forward to setting up business relationship with you and hope to provide you with the best service and solution. Let us make a better world for our industry!

Contact us

Tel: +86-755-8981 8866 Fax: +86-755-8427 6832
Email & Skype: info@chipsmall.com Web: www.chipsmall.com
Address: A1208, Overseas Decoration Building, #122 Zhenhua RD., Futian, Shenzhen, China

THIS DRAWING IS UNPUBLISHED. RELEASED FOR PUBLICATION -,- .
© COPYRIGHT - BY TYCO ELECTRONICS CORPORATION. ALL RIGHTS RESERVED.

LOC	DIST
ES	00

REVISIONS

P	LTR	DESCRIPTION	DATE	DWN	APVD
	B1	REVISED ECR-06-021277	05SEP06	C.Z	S.Y

PANEL CUT DIMENSIONS

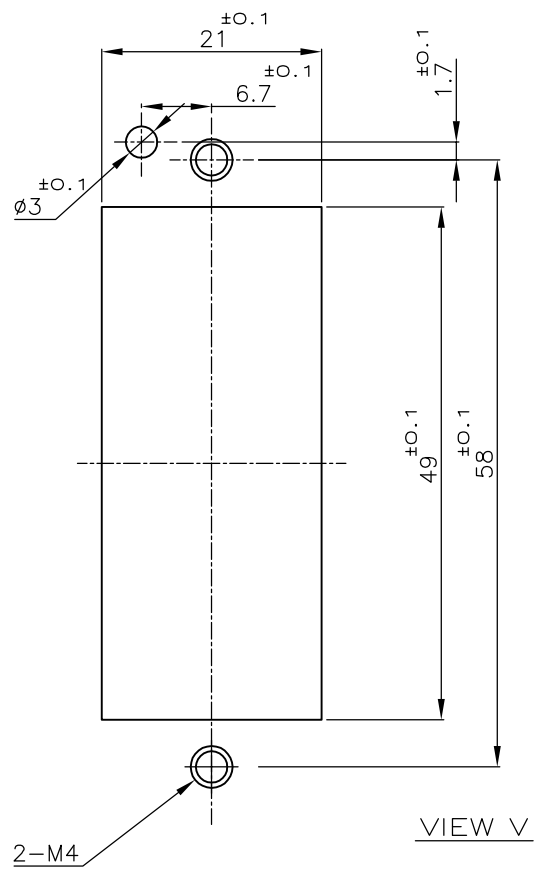

VIEW V

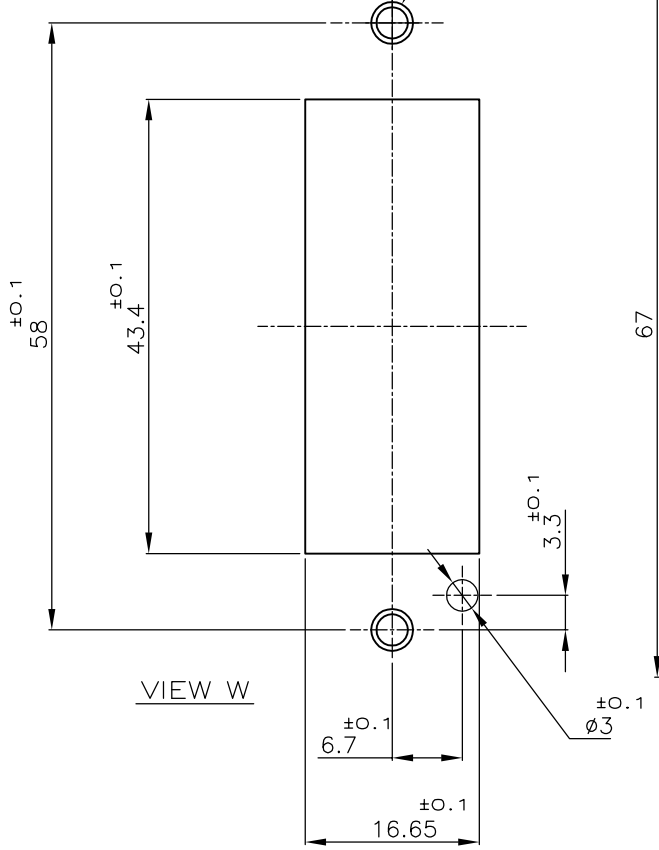

VIEW W

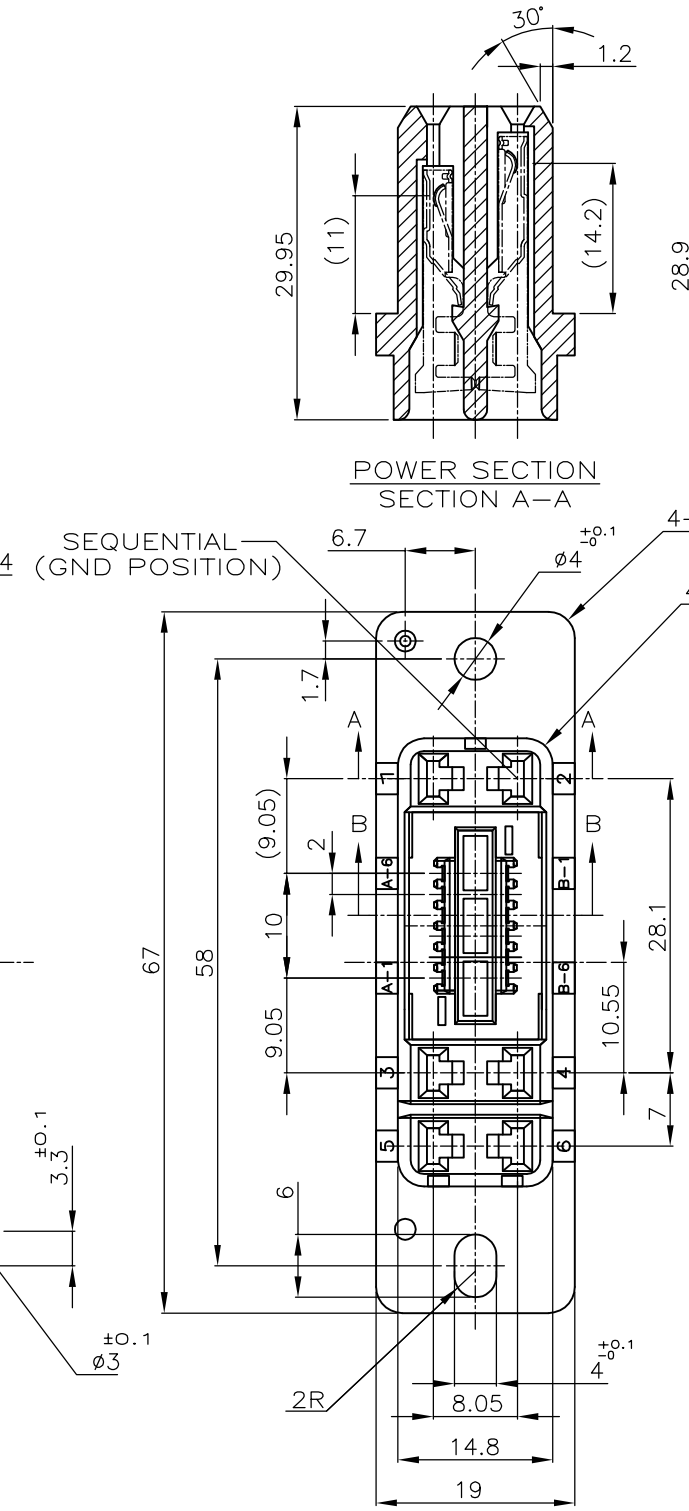

NOTES

1. MATERIAL
   HOUSING:THERMO PLASTIC
   CONTACT:COPPER ALLOY
2. CONTACT FINISH
   MATING SIDE:NICKEL PL.ALL OVER GOLD PL.
   CT MATING SIDE:NICKEL PL.ALL OVER MATTE TIN PL.
3. APPLIED POWER CONTACT P/N

FINISH	AWG	STRIP	LOOSE PIECE
GOLD PL.	#16~20	179316-4	
	#20~24	179317-4	
TIN PL.	#16~20	1-179316-2	
	#20~24	1-179317-2	

4. APPLIED GND CONTACT P/N

FINISH	AWG	STRIP	LOOSE PIECE
GOLD PL	#16~20	316458-4	
TIN PL.	#16~20	1-316458-2	

5. P:NUMBER OF POWER AND GND CONTACT (UNLOADED)
   S:NUMBER OF SIGNAL CONTACT (PRELOADED)

I.D.C TYPE		CRIMP TYPE				
1-175133-2	173977-6	CRIMPII:1-179472-2	CRIMPII CONT.:179227-1 HSG :179228-6	1-292183-2	6-12	1-292186-2
APPLIED CT HOLDER P/N	APPLIED CTCONN P/N	APPLIED CT HOLDER P/N	APPLIED CTCONN P/N	MATING COUNTER P/N	POS 5 (P-S)	P/N

THIS DRAWING IS A CONTROLLED DOCUMENT.

TOLERANCES UNLESS OTHERWISE SPECIFIED
10≥* :±0.2
30≥*>10 :±0.25
100≥*>30 :±0.3
ANGLE :±3°

DIMENSIONS: MM

TOLERANCES UNLESS OTHERWISE SPECIFIED:
0 PLC ± -
1 PLC ± -
2 PLC ± -
3 PLC ± -
4 PLC ± -
ANGLES ± -

MATERIAL: SEE NOTE
FINISH: SEE NOTE

DWN J.JIANG 05FEB03
CHK S.YAO 05FEB03
APVD T.SASAKI 05FEB03
PRODUCT SPEC 108-60022
APPLICATION SPEC
WEIGHT
CUSTOMER DRAWING

tyco Electronics
Tyco Electronics Corporation
Shanghai, P.R.China,200233

NAME
RECEPTACLE ASSEMBLY 18P(6-12) SEQUENTIAL TYPE HYBRID MINI DRAWER CONNECTOR (IEC-950)

SIZE	CAGE CODE	DRAWING NO	RESTRICTED TO
A2	00779	C-292186	—

SCALE 2:1 SHEET 1 OF 1 REV B1