Chipsmall Limited consists of a professional team with an average of over 10 year of expertise in the distribution of electronic components. Based in Hongkong, we have already established firm and mutual-benefit business relationships with customers from,Europe,America and south Asia,supplying obsolete and hard-to-find components to meet their specific needs.

With the principle of “Quality Parts,Customers Priority,Honest Operation,and Considerate Service”,our business mainly focus on the distribution of electronic components. Line cards we deal with include Microchip,ALPS,ROHM,Xilinx,Pulse,ON,Everlight and Freescale. Main products comprise IC,Modules,Potentiometer,IC Socket,Relay,Connector.Our parts cover such applications as commercial,industrial, and automotives areas.

We are looking forward to setting up business relationship with you and hope to provide you with the best service and solution. Let us make a better world for our industry!

Contact us

Tel: +86-755-8981 8866 Fax: +86-755-8427 6832
Email & Skype: info@chipsmall.com Web: www.chipsmall.com
Address: A1208, Overseas Decoration Building, #122 Zhenhua RD., Futian, Shenzhen, China

THIS DRAWING IS UNPUBLISHED. RELEASED FOR PUBLICATION
© COPYRIGHT BY TYCO ELECTRONICS CORPORATION. ALL RIGHTS RESERVED.

LOC	DIST
J	

REVISIONS 変更

P	LTR	DESCRIPTION	DATE	DWN	APVD
	E	REVISED FJB0-0166-03	11MAR03	H.H	T.K

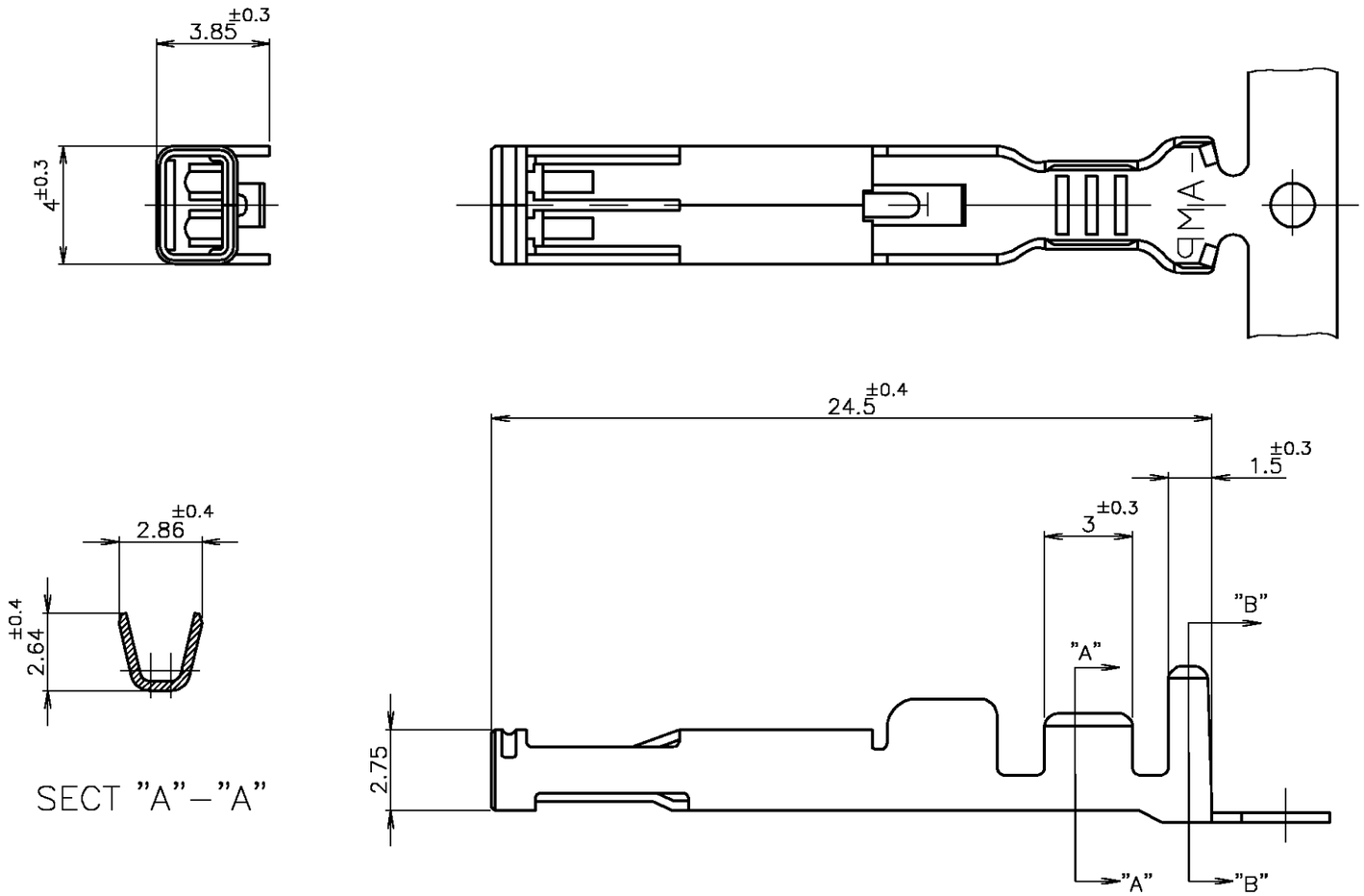

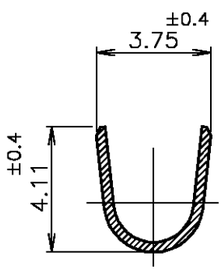

注記

1. 材料： 銅合金
2. 仕上げ：材料めっき
   全面ニッケル下地めっきの上に
   接触部：金めっき
   圧着部：半田めっき
3. 仕上げ： 全面錫メッキ
4. 仕上げ：材料めっき
   全面ニッケル下地めっきの上に
   接触部：金めっき
   圧着部：錫めっき
5. 使用コネクタ型番：X-316456-X,X-353369-X
   ：X-353463-X
6. 一般公差
   10以下：±0.2
   10を越え30以下：±0.25
   30を越え100以下：±0.3
   角度：±3°

NOTES;

1. MATERIAL : COPRER ALLOY.
2. FINISH : PRE-PLATED
   NICKEL PL ALL OVER
   CONTACT AREA : GOLD PL.
   BAREL AREA : TIN-LEAD PL.
3. FINISH : TIN PL ALL OVER.
4. FINISH : PRE-PLATED
   NICKEL PL ALL OVER
   CONTACT AREA : GOLD PL.
   BARREL AREA : TIN PL.
5. USED CONNECTOR P/N : X-316456-X,X-353369-X
   : X-353463-X
6. GENERAL TOLERANCE
   10≥ : ±0.2
   30≥ >10: ±0.25
   100≥ >30: ±0.3
   ANGLES: ±3°

4	316458-4
3	1-316458-2
2	316458-2
仕上 FINISH	P/N

WIRE RANGE 適合電線断面積	INSULATION DIA 被覆外径
0.5~1.25mm²(AWG16~20)	ø1.85~2.8 mm

THIS DRAWING IS A CONTROLLED DOCUMENT.

DIMENSIONS: 単位： 粍 MM

TOLERANCES UNLESS OTHERWISE SPECIFIED: 一般公差

0 PLC	±	6
1 PLC	±	
2 PLC	±	
3 PLC	±	
4 PLC	±	
ANGLES	±	

MATERIAL 材料 1

FINISH 仕上 2 3 4

DWN	K.IINO	28OCT98
CHK	J.TANIGAWA	28OCT98
APVD	S.KUBOUCHI	28OCT98

PRODUCT SPEC 製品規格

APPLICATION SPEC 取付適用規格 114-5182

WEIGHT

CUSTOMER DRAWING

tyco Electronics

Tyco Electronics AMP K.K.
Kawasaki,Japan

NAME 名称

RECEPTACLE GND CONTACT
HYBRID SF DRAWER CONNECTOR

SIZE	CAGE CODE	DRAWING NO 番号	RESTRICTED TO
A3	00779	C-316458	—

SCALE 尺度 1:1 SHEET 1 OF 1 REV E

AMP 1470-19 REV 31MAR2000

10MAR2003 3:09pm FJ033815