Chipsmall Limited consists of a professional team with an average of over 10 year of expertise in the distribution of electronic components. Based in Hongkong, we have already established firm and mutual-benefit business relationships with customers from,Europe,America and south Asia,supplying obsolete and hard-to-find components to meet their specific needs.

With the principle of “Quality Parts,Customers Priority,Honest Operation,and Considerate Service”,our business mainly focus on the distribution of electronic components. Line cards we deal with include Microchip,ALPS,ROHM,Xilinx,Pulse,ON,Everlight and Freescale. Main products comprise IC,Modules,Potentiometer,IC Socket,Relay,Connector.Our parts cover such applications as commercial,industrial, and automotives areas.

We are looking forward to setting up business relationship with you and hope to provide you with the best service and solution. Let us make a better world for our industry!

Contact us

Tel: +86-755-8981 8866 Fax: +86-755-8427 6832
Email & Skype: info@chipsmall.com Web: www.chipsmall.com
Address: A1208, Overseas Decoration Building, #122 Zhenhua RD., Futian, Shenzhen, China

THIS DRAWING IS UNPUBLISHED. RELEASED FOR PUBLICATION -,- .
© COPYRIGHT - BY TYCO ELECTRONICS CORPORATION. ALL RIGHTS RESERVED.

LOC	DIST
H	—

REVISIONS

P	LTR	DESCRIPTION	DATE	DWN	APVD
	D	EH10-0680-05	06-06-05	BSV	BM
	D1	ECR-06-002635	07-02-06	BSV	BM
	E	ECR-06-026577	14-11-06	BSV	BM

CONNECTOR ASSEMBLY EXEMPLARY LOADED

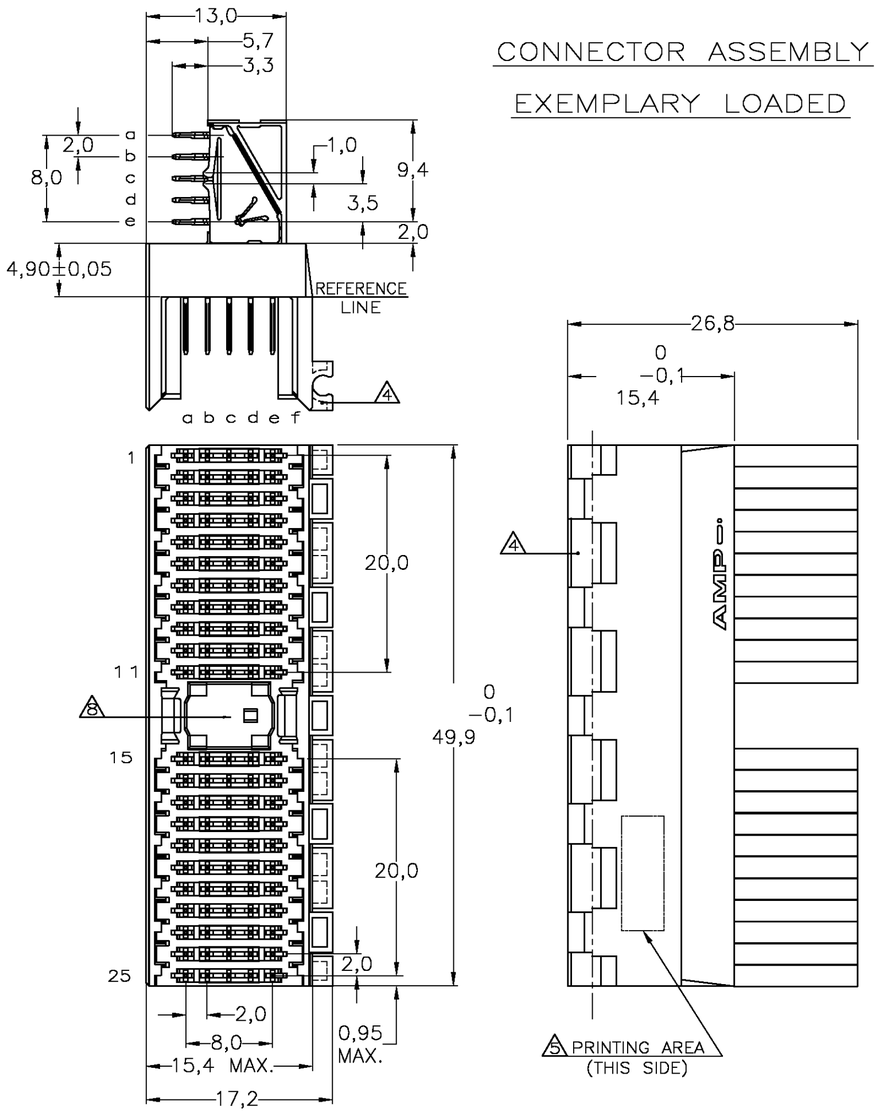

CONTACT DIMENSIONS

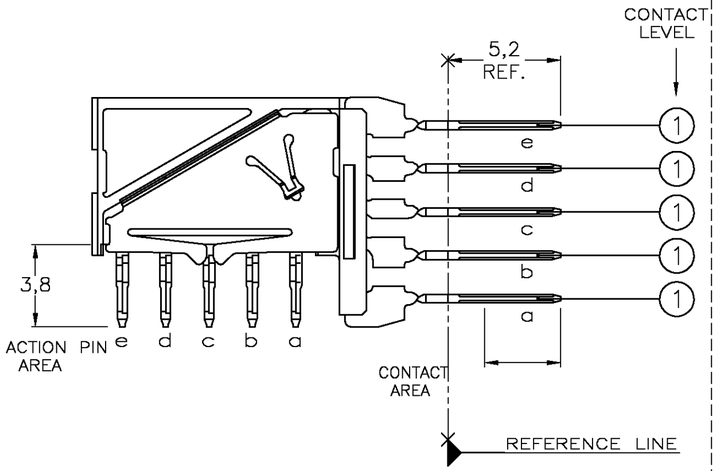

RECOMMENDED PCB-HOLE LAY-OUT COMPONENT SIDE SHOWN

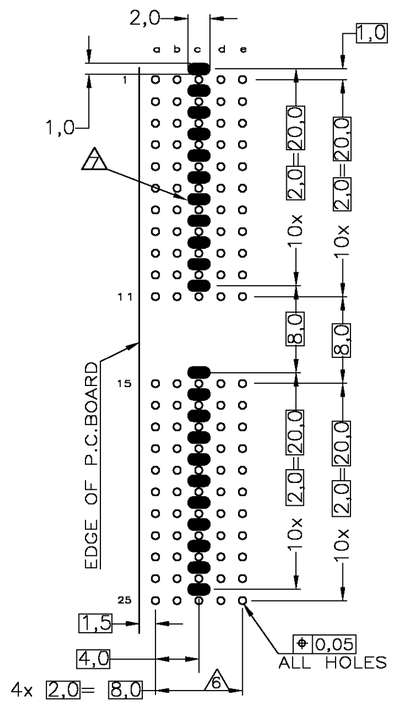

P.C.B. HOLE DIM. ACTION PIN
FOR DETAILS SEE
APPLICATION SPECIFICATION

CONTACT LAYOUT

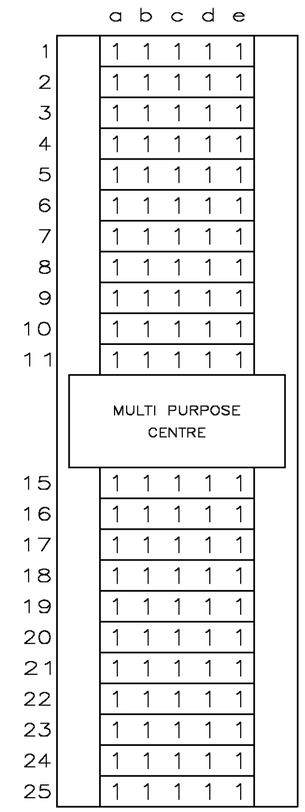

NOTES:

1. MATERIAL HOUSING: GREY GLASSFILLED POLYESTER UL-RATING V0
   CONTACT: PHOSPHORBRONZE
2. GENERAL CONTACT PLATING SPECIFICATION: UNDERPLATING (ENTIRE CONTACT): 1,27µm NICKEL MIN. AND ACTION PIN: 0,5µm TIN-LEAD MIN.
   FOR PLATING OF MATING SURFACES SEE APPLICABLE SPECIFICATION REFERENCE FOR EACH DASH NUMBER.
   REDUCED CROSS-TALK SHIELD: GOLD FLASH OVER 1,27µm NICKEL MIN.
3. CONFORMS TO ALL TESTING ACCORDING IEC 61076-4-101 PERFORMANCE LEVEL 2.
4. CONNECTOR ASSEMBLY WITH LATCH HINGE FOR CABLE CONNECTOR.
5. CONNECTOR PRINTED WITH PARTNUMBER AND DATECODE
6. PLATED-THROUGH HOLES AT 2x2mm SQUARE GRID.
7. PLATED SPOT ONLY ON COMPONENT SIDE, FORMING ONE CONTACT WITH PLATED THROUGH HOLES OF ROW C
8. AREA FOR KEYING PART (BASIC PART NUMBER 100525).

2,3	1	1-352271-1 4
2,3	1	352271-1
CONTACT FINISH	MATERIAL	PARTNUMBER

THIS DRAWING IS A CONTROLLED DOCUMENT.

DIMENSIONS: mm

TOLERANCES UNLESS OTHERWISE SPECIFIED:
0 PLC ± -
1 PLC ± -
2 PLC ± -
3 PLC ± -
4 PLC ± -
ANGLES ± -

MATERIAL -
FINISH -

DWN L.V.D.HEIJDEN 12FEB98
CHK D.TRUREN 12FEB98
APVD F.V.KONINGSBRUGGE -
PRODUCT SPEC 108-19082
APPLICATION SPEC 114-19029
WEIGHT -

tyco Electronics — Tyco Electronics Corporation s-HertogenBosch,Netherlands,

NAME Z-PACK 2MM HM TYPE A 110 POS. RIGHT ANGLE MALE CONNECTOR WITH REDUCED CROSS-TALK SHIELDS

SIZE	CAGE CODE	DRAWING NO	RESTRICTED TO
A2	00779	C-352271	—

CUSTOMER DRAWING | SCALE NTS | SHEET 1 OF 1 | REV E

352271

AMP 1471-9 REV 31MAR2000