Chipsmall Limited consists of a professional team with an average of over 10 year of expertise in the distribution of electronic components. Based in Hongkong, we have already established firm and mutual-benefit business relationships with customers from,Europe,America and south Asia,supplying obsolete and hard-to-find components to meet their specific needs.

With the principle of “Quality Parts,Customers Priority,Honest Operation,and Considerate Service”,our business mainly focus on the distribution of electronic components. Line cards we deal with include Microchip,ALPS,ROHM,Xilinx,Pulse,ON,Everlight and Freescale. Main products comprise IC,Modules,Potentiometer,IC Socket,Relay,Connector.Our parts cover such applications as commercial,industrial, and automotives areas.

We are looking forward to setting up business relationship with you and hope to provide you with the best service and solution. Let us make a better world for our industry!

Contact us

Tel: +86-755-8981 8866 Fax: +86-755-8427 6832
Email & Skype: info@chipsmall.com Web: www.chipsmall.com
Address: A1208, Overseas Decoration Building, #122 Zhenhua RD., Futian, Shenzhen, China

THIS DRAWING IS UNPUBLISHED. RELEASED FOR PUBLICATION - , - .
© COPYRIGHT - By - ALL RIGHTS RESERVED.

LOC	DIST
GP	00

REVISIONS

P	LTR	DESCRIPTION	DATE	DWN	APVD
	AE2	REVISED PER ECO-11-005033	23MAR11	RK	HMR

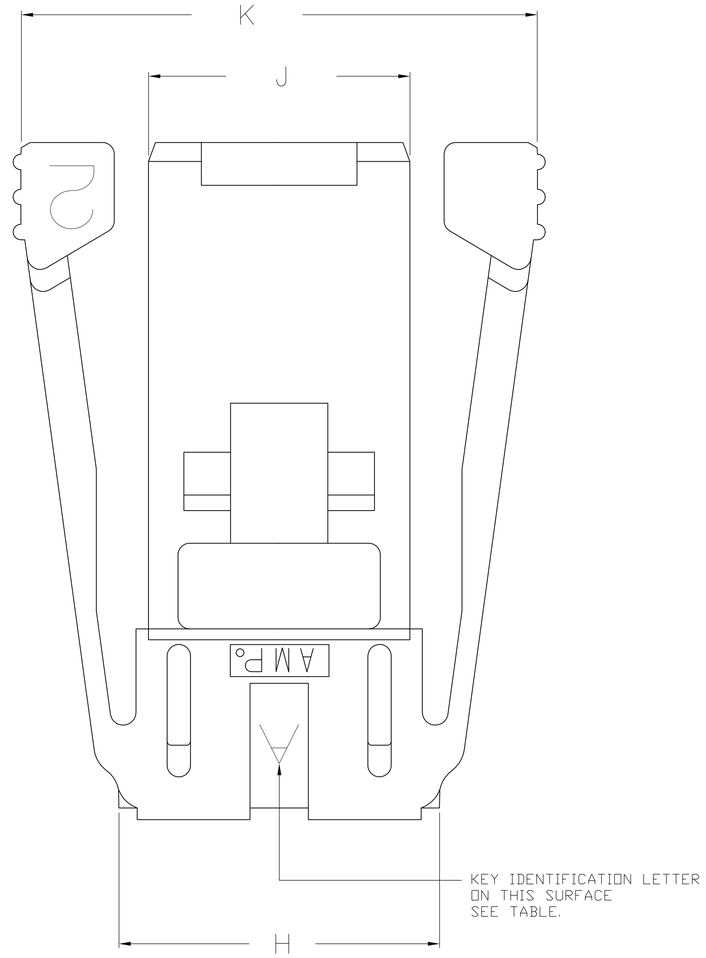

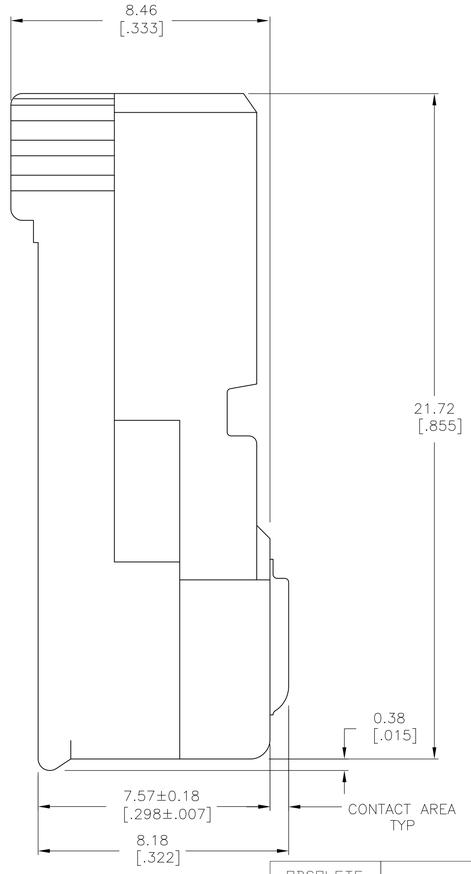

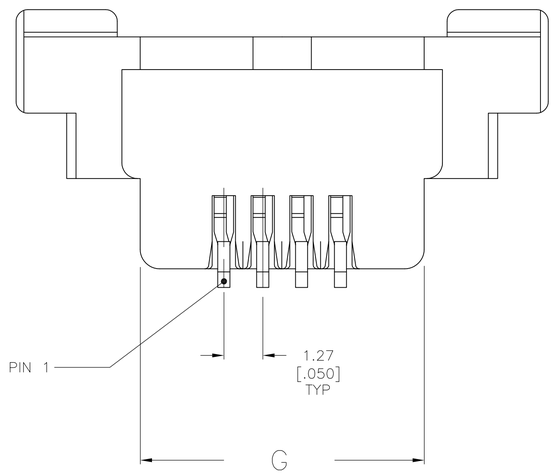

1. PREFIX AND SUFFIX NUMBERS MUST MATCH THOSE ON RECEPTACLE FOR PARTS TO MATE.

2. MATERIAL:
   HOUSING- POLYCARBONATE
   CONTACT- COPPER ALLOY

3. FINISH:
   HOUSING- SMOKE GRAY
   CONTACT- 0.00127[.000050] MIN NICKEL OVER ENTIRE PART,
   0.00002[.000001] MIN GOLD FLASH OVER ENTIRE PART,
   0.00127[.000050] MIN GOLD OVER CONTACT AREA.

4. CABLES SHOULD MEET AMP DRAWING SPECIFICATIONS 520704-1.

5. CABLES SHOULD MEET AMP DRAWING SPECIFICATIONS 520705-1.

6. CABLES SHOULD MEET AMP DRAWING SPECIFICATIONS 520706-1.

7. CABLES SHOULD MEET AMP DRAWING SPECIFICATIONS 520707-1.

8. BULK CABLE IS NOT AVAILABLE FROM AMP INC.

9. FOR TERMINATION OF 24 AWG, 7 STRANDED, ROUND CABLE WITH 1.27[.050] NOMINAL O.D. CONDUCTOR INSULATION, PER LISTED DRAWING SPECIFICATIONS.

BOOT	TOP SHIELD	BOTTOM SHIELD	CABLE OD/FERRULE		CABLE OD/FERRULE		K	J	H	G	NO OF POSN	KEY I.D. LETTER	PART NO
OBSOLETE							16.87 [.664]	8.64 [.340]	10.46 [.412]	9.35 [.368]	4	F	4 6-520424-1
	520854-1	520466-1	520467-1	5.82-6.91 [.229-.272]	520440-1	7.32-7.82 [.288-.308]	520441-1	32.11 [1.264]	23.88 [.940]	25.70 [1.012]	24.59 [.968]	16	E	7 5-520424-6
	520853-1	520464-1	520465-1	4.55-5.38 [.179-.212]	520436-1	5.69-6.20 [.224-.244]	520437-1	21.95 [.864]	13.72 [.540]	15.54 [.612]	14.43 [.568]	8	E	6 5-520424-3
OBSOLETE	520852-1	520462-1	520463-1	——	——	5.36-5.72 [.211-.225]	520435-1	19.41 [.764]	11.18 [.440]	13.00 [.512]	11.89 [.468]	6	E	5 5-520424-2
	520851-1	520460-1	520461-1	3.73-4.42 [.147-.174]	520432-1	4.72-5.08 [.186-.200]	520433-1	16.87 [.664]	8.64 [.340]	10.46 [.412]	9.35 [.368]	4	E	4 5-520424-1
OBSOLETE								21.95 [.864]	13.72 [.540]	15.54 [.612]	14.43 [.568]	8	D	6 4-520424-3
OBSOLETE								19.41 [.764]	11.18 [.440]	13.00 [.512]	11.89 [.468]	6	D	5 4-520424-2
	520851-1	520460-1	520461-1	3.73-4.42 [.147-.174]	520432-1	4.72-5.08 [.186-.200]	520433-1	16.87 [.664]	8.64 [.340]	10.46 [.412]	9.35 [.368]	4	D	4 4-520424-1
	520853-1	520464-1	520465-1	4.55-5.38 [.179-.212]	520436-1	5.69-6.20 [.224-.244]	520437-1	21.95 [.864]	13.72 [.540]	15.54 [.612]	14.43 [.568]	8	C	6 3-520424-3
OBSOLETE								19.41 [.764]	11.18 [.440]	13.00 [.512]	11.89 [.468]	6	C	5 3-520424-2
OBSOLETE								16.87 [.664]	8.64 [.340]	10.46 [.412]	9.35 [.368]	4	C	4 3-520424-1
OBSOLETE								32.11 [1.264]	23.88 [.940]	25.70 [1.012]	24.59 [.968]	16	C	7 3-520424-6
OBSOLETE								21.95 [.864]	13.72 [.540]	15.54 [.612]	14.43 [.568]	8	B	6 2-520424-3
OBSOLETE								19.41 [.764]	11.18 [.440]	13.00 [.512]	11.89 [.468]	6	B	5 2-520424-2
OBSOLETE	520851-1	520460-1	520461-1	3.73-4.42 [.147-.174]	520432-1	4.72-5.08 [.186-.200]	520433-1	16.87 [.664]	8.64 [.340]	10.46 [.412]	9.35 [.368]	4	B	4 2-520424-1
	520854-1	520466-1	520467-1	5.82-6.91 [.229-.272]	520440-1	7.32-7.82 [.288-.308]	520441-1	32.11 [1.264]	23.88 [.940]	25.70 [1.012]	24.59 [.968]	16	A	7 1-520424-6
	520853-1	520464-1	520465-1	4.55-5.38 [.179-.212]	520436-1	5.69-6.20 [.224-.244]	520437-1	21.95 [.864]	13.72 [.540]	15.54 [.612]	14.43 [.568]	8	A	6 1-520424-3
	520852-1	520462-1	520463-1	——	——	5.36-5.72 [.211-.225]	520435-1	19.41 [.764]	11.18 [.440]	13.00 [.512]	11.89 [.468]	6	A	5 1-520424-2
	520851-1	520460-1	520461-1	3.73-4.42 [.147-.174]	520432-1	4.72-5.08 [.186-.200]	520433-1	16.87 [.664]	8.64 [.340]	10.46 [.412]	9.35 [.368]	4	A	4 1-520424-1

THIS DRAWING IS A CONTROLLED DOCUMENT.

DIMENSIONS: mm [INCHES]

TOLERANCES, UNLESS OTHERWISE SPECIFIED:
0 PLC ± -
1 PLC ± -
2 PLC ± 0.25 [.010]
3 PLC ± -
4 PLC ± -
ANGLES ± -

MATERIAL 2
FINISH 3

DWN B. MCMASTER 09FEB2004
CHK C. ROHDE 09FEB04
APVD M. WALMSLEY 09FEB04
PRODUCT SPEC 108-2047
APPLICATION SPEC 114-2090
WEIGHT -

TE Connectivity

NAME PLUG SUB-ASSY, ROUND CABLE, 50 SERIES, SDL

SIZE	CAGE CODE	DRAWING NO	RESTRICTED TO
A1	00779	C-520424	-

CUSTOMER DRAWING SCALE 1:1 SHEET 1 OF 1 REV AE2

4805 (3/11)