Chipsmall Limited consists of a professional team with an average of over 10 year of expertise in the distribution of electronic components. Based in Hongkong, we have already established firm and mutual-benefit business relationships with customers from,Europe,America and south Asia,supplying obsolete and hard-to-find components to meet their specific needs.

With the principle of “Quality Parts,Customers Priority,Honest Operation,and Considerate Service”,our business mainly focus on the distribution of electronic components. Line cards we deal with include Microchip,ALPS,ROHM,Xilinx,Pulse,ON,Everlight and Freescale. Main products comprise IC,Modules,Potentiometer,IC Socket,Relay,Connector.Our parts cover such applications as commercial,industrial, and automotives areas.

We are looking forward to setting up business relationship with you and hope to provide you with the best service and solution. Let us make a better world for our industry!

Contact us

Tel: +86-755-8981 8866 Fax: +86-755-8427 6832
Email & Skype: info@chipsmall.com Web: www.chipsmall.com
Address: A1208, Overseas Decoration Building, #122 Zhenhua RD., Futian, Shenzhen, China

THIS DRAWING IS UNPUBLISHED. RELEASED FOR PUBLICATION -.- .
© COPYRIGHT 2005 BY TYCO ELECTRONICS CORPORATION. ALL RIGHTS RESERVED.

LOC	DIST
AD	25

REVISIONS

P	LTR	DESCRIPTION	DATE	DWN	APVD
	N	REVISED PER ECN OS12-0239-05	16MAY06	JDP	AMS

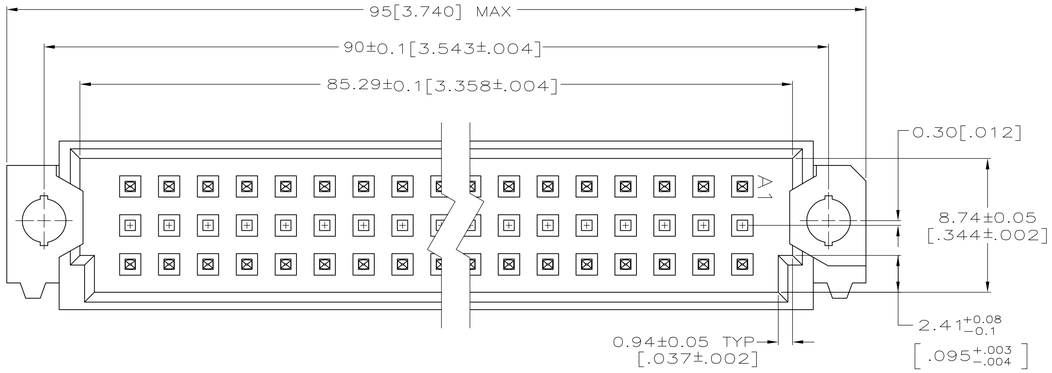

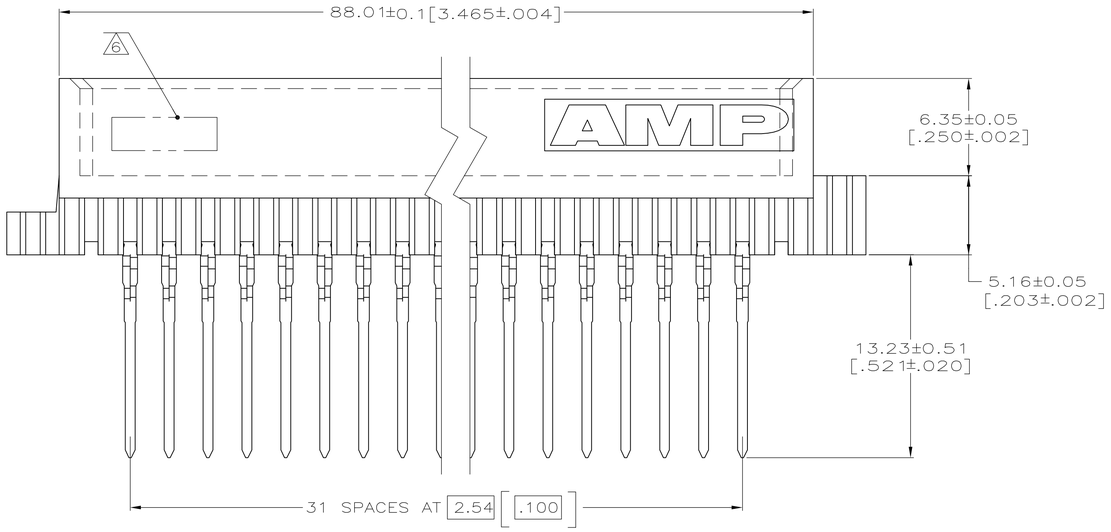

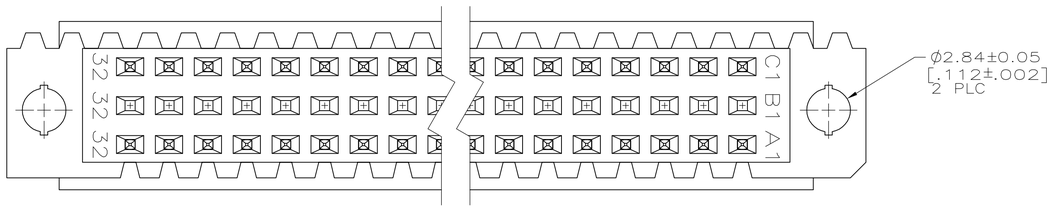

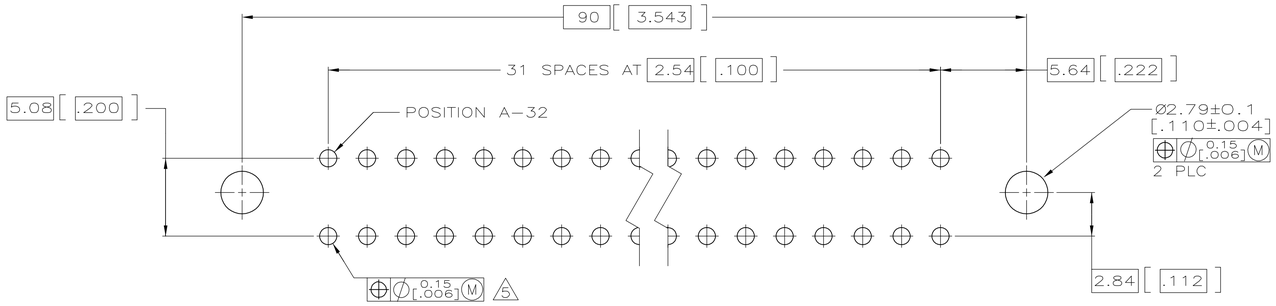

PC BOARD LAYOUT

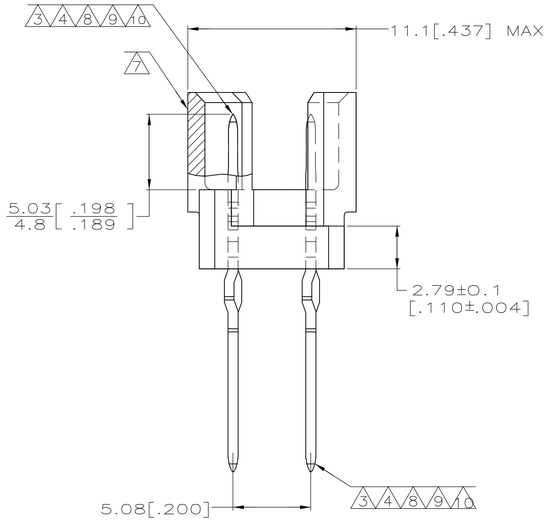

1. HOUSING MATERIAL: GLASS-FILLED POLYESTER. COLOR: GRAY.
2. POST MATERIAL: PHOSPHOR BRONZE.
3. POST FINISH: DIN 41612 CLASS 3 IN CONTACT AREA. TIN-LEAD PLATE ON POSTS.
4. POST FINISH: DIN 41612 CLASS 2 IN CONTACT AREA. TIN-LEAD PLATE ON POSTS.
5. ACTION PIN POSTS REQUIRE 2.36[.093] MINIMUM THICK PC BOARD. RECOMMENDED PC BOARD HOLES ARE 1.151[.0453] DIA PLATED THROUGH WITH 0.02-0.08[.001-.003] COPPER AND 0.008[.0003] MINIMUM TIN-LEAD PLATING. FINISHED HOLE AFTER PLATING, 0.94-1.09[.037-.043] DIA.
6. PART NUMBER, DATE CODE MARKED THIS APPROXIMATE AREA.
7. MARKING ON THIS SIDE.
8. POST FINISH: DIN 41612 CLASS 2 IN CONTACT AREA AND LAST 5.08[.200] OF POST.
9. POST FINISH: DIN 41612 CLASS 3 IN CONTACT AREA AND LAST 5.08[.200] OF POST.
10. POST FINISH: DIN 41612 CLASS 2 IN CONTACT AREA. TIN PLATE ON POSTS.

	NOTES	POSITIONS LOADED	ROWS LOADED C	ROWS LOADED B	ROWS LOADED A	NO. OF LOADED POSITION	ASSY PART NUMBER
OBSOLETE	10	1-32	X	–	X	64	7-650930-5
SUPERSEDED BY 1-650930-4	9	1-32	X	–	X	64	1-650930-9
	8	1-32	X	–	X	64	1-650930-4
OBSOLETE	3	1-32	X	–	X	64	650930-9
OBSOLETE	4	1-32	X	–	X	64	650930-5

THIS DRAWING IS A CONTROLLED DOCUMENT.

DIMENSIONS: mm [INCHES]

TOLERANCES UNLESS OTHERWISE SPECIFIED:
0 PLC ± –
1 PLC ± –
2 PLC ± –
3 PLC ± 0.13[.005]
4 PLC ± –
ANGLES ± –

MATERIAL 1 2

FINISH 3 4 8 9 10

DWN L. BRINER 18MAR91
CHK D.C. RUBENDALL 26MAR91
APVD K.R. PARMER 26MAR91
PRODUCT SPEC —
APPLICATION SPEC —
WEIGHT —

tyco Electronics
Tyco Electronics Corporation
Harrisburg, PA 17105-3608

NAME PIN ASSEMBLY, EUROCARD, TYPE R

SIZE	CAGE CODE	DRAWING NO	RESTRICTED TO
A1	00779	C-650930	—

CUSTOMER DRAWING SCALE 5:1 SHEET 1 OF 1 REV N