Chipsmall Limited consists of a professional team with an average of over 10 year of expertise in the distribution of electronic components. Based in Hongkong, we have already established firm and mutual-benefit business relationships with customers from,Europe,America and south Asia,supplying obsolete and hard-to-find components to meet their specific needs.

With the principle of “Quality Parts,Customers Priority,Honest Operation,and Considerate Service”,our business mainly focus on the distribution of electronic components. Line cards we deal with include Microchip,ALPS,ROHM,Xilinx,Pulse,ON,Everlight and Freescale. Main products comprise IC,Modules,Potentiometer,IC Socket,Relay,Connector.Our parts cover such applications as commercial,industrial, and automotives areas.

We are looking forward to setting up business relationship with you and hope to provide you with the best service and solution. Let us make a better world for our industry!

Contact us

Tel: +86-755-8981 8866 Fax: +86-755-8427 6832
Email & Skype: info@chipsmall.com Web: www.chipsmall.com
Address: A1208, Overseas Decoration Building, #122 Zhenhua RD., Futian, Shenzhen, China

THIS DRAWING AND THE SUBJECT MATTER SHOWN THEREON ARE CONFIDENTIAL AND THE PROPERTY OF BEL/STEWART/TRP CONNECTOR AND SHALL NOT BE REPRODUCED, COPIED, OR USED IN ANY MANNER WITHOUT THE WRITTEN CONSENT OF TRP CONNECTOR.

PRODUCT MAY BE PROTECTED BY ONE OR MORE OF THE FOLLOWING US PATENTS:
5736910 5939955 6425781 6428361 6554638 6840817 7123117
7429195 7717749 7808751 6217391 6149050 7924130

REVISIONS

P	LTR REV	DESCRIPTION	DATE	DRN	APVD
	F	EC-1411035 COMPANY LOGO CHANGE	23DEC2014	ST	TL

MECHANICAL:

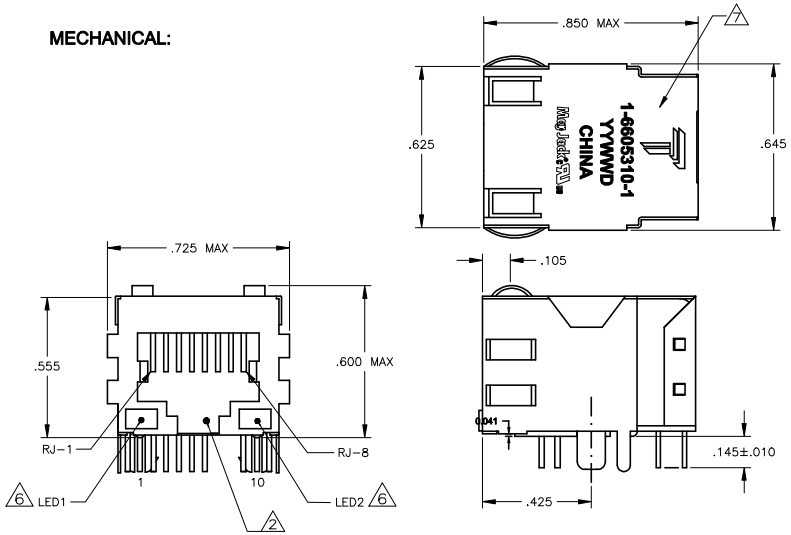

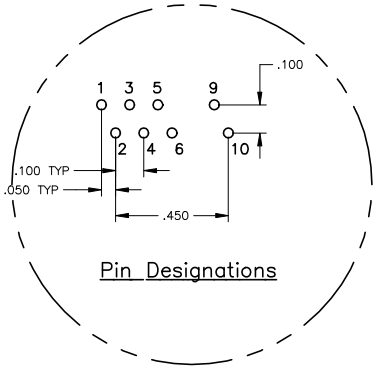

Pin Designations

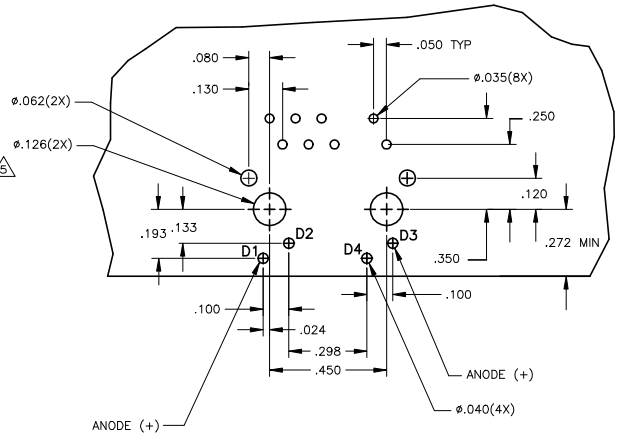

Suggested PCB Layout
(Component Side)

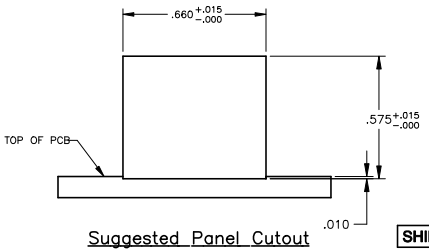

Suggested Panel Cutout

ELECTRICAL:

3D15 SERIES PoE MAGNETIC CIRCUIT

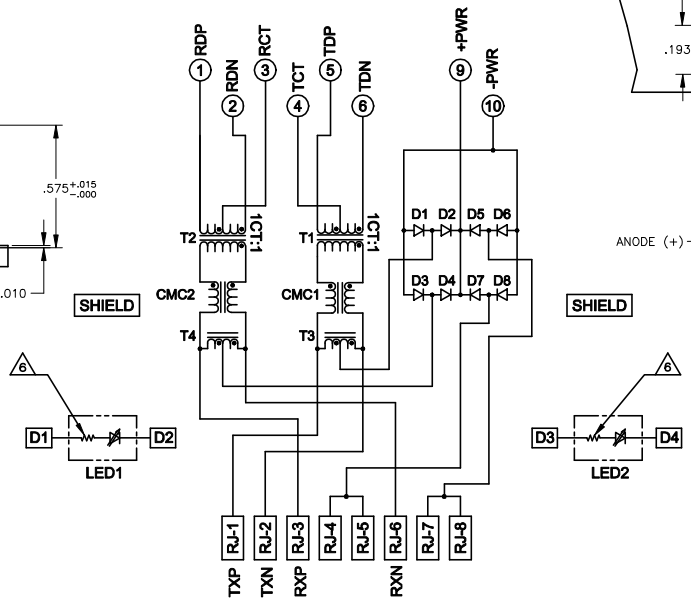

D1-D8 = RECTIFIER DIODES
FORWARD VOLTAGE, Vf = 1.2V MAX @ If=0.5A
FORWARD CURRENT, If = 0.5A MAX
REVERSE VOLTAGE, Vr = 80V MAX

1 MATERIALS:
HOUSING - THERMOPLASTIC PET POLYESTER FLAMMABILITY RATING UL 94V-0.
SHIELD - .010" THICK, C26800 BRASS PREPLATED WITH 30µINCH SEMI-BRIGHT NICKEL. SOLDER TABS POST DIPPED WITH 100µINCH MIN SAC SOLDER.
MOD JACK CONTACTS - 0.0157 X 0.018" PHOSPHOR BRONZE, 50µINCH MIN OVERALL NICKEL UNDERPLATE, WITH SELECT 50µINCH MIN HARD GOLD FINISH PLATE SOLDERTAILS WITH 100µINCH MIN MATTE TIN AND/OR SAC SOLDER DIP.
LIGHT EMITTING DIODE(LED) - DIFFUSED EPOXY LENS, .020" x .020" CARBON STEEL WIREFRAME LEADS PRE-PLATED WITH 80µINCH SILVER OVER 40µINCH NICKEL UNDERPLATE OVER 40µINCH COPPER UNDERPLATE. POST-PLATED WITH 100µINCH MIN MATTE TIN AND/OR SAC SOLDER DIP OR PURE TIN SOLDER DIP.

2 RJ45 JACK CAVITY CONFORMS TO FCC RULES AND REGULATIONS PART 68, SUB PART F.

3 MAGNETICS
-IMPEDANCE: 100 OHMS
-TURNS RATIO (CHIP:CABLE): TX = 1:1, RX = 1:1
-OPEN CIRCUIT INDUCTANCE (OCL): 350µH MIN @100kHz, 0.1VRMS, 8mADC BIAS FROM 0°C TO 70°C, TX AND RX
-POE CURRENT: 350mADC MAX
-PERFORMANCE @ 25°C:
INSERTION LOSS (IL): 1.1dB MAX FROM 0.5MHz TO 100MHz
RETURN LOSS (RL): 18dB MIN FROM 0.5MHZ TO 30MHz
18-20LOG(f/30)dB MIN FROM 30.1MHz TO 60MHz
12dB MIN FROM 60.1MHz TO 80MHz
CROSSTALK ATTENUATION: 35dB MIN FROM 0.5MHz TO 40MHz
33-20*LOG(f/50)dB MIN FROM 40.1MHz TO 100MHz
COMMON MODE REJECTION RATIO (CMRR): 30dB MIN FROM 0.5MHz TO 100MHz
-ISOLATION VOLTAGE:1500VAC (MAX) AT 60Hz FOR 60 SECS.

4. OPERATING TEMPERATURE: FROM 0°C TO +70°C.

5 INDICATED CONNECTIONS ARE FOR NIC CONFIGURATION. THE MAGNETICS ARE SYMMETRIC, AND SUPPORT AUTO-MDI/MDIX.

6 THE 250 OHM RESISTOR IS INCLUDED IN THE LEDS.
LEDS ARE DRIVEN WITH 5V VOLTAGE AND THE MAX OPERATING CURRENT IS 20mA.
LED COLOR: DOMINANT WAVELENGTH (λD): GREEN 568 nm TYP @ VF=5V
FORWARD CURRENT (IF): GREEN 12mA TYP @ VF=5V

7 TRP CONNECTOR LOGO, PART NUMBER, DATE CODE, COUNTRY OF ORIGIN AND AGENCY APPROVAL MARKING IN APPROXIMATE LOCATION SHOWN.

8. THE PART IS RECOMMENDED FOR WAVE SOLDERING PROCESS, PREHEAT TEMPERATURE IS 120°C TO 160°C, 120 SECONDS TO 180 SECONDS , PEAK WAVE SOLDERING TEMPERATURE IS 260°C MAX,10 SECONDS MAX.

GREEN	GREEN	1-6605310-1
LED1	LED2	PART NUMBER

THIS DRAWING IS A CONTROLLED DOCUMENT.
DIMENSIONS: INCHES
TOLERANCES UNLESS OTHERWISE SPECIFIED:
0 PLC ± -
1 PLC ± -
2 PLC ± 0.010
3 PLC ± 0.005
4 PLC ± -
ANGLES ± -
PRODUCT SPEC 108-2100
APPLICATION SPEC -
DRN G.ATTADIA-DOCKS 04MAR2005
CHK D.FAROLE 04MAR2005
APVD D.FAROLE 04MAR2005
MODEL NAME MAGJACK SINGLE NON-POE
CUSTOMER DRAWING
trp CONNECTOR a bel group
DONGGUAN CHINA
DESC 1X1 3D15 10/100 TAB DOWN W/ LED
SIZE A1
CAGE CODE
DRAWING NO C-6605310
RESTRICTED TO -
SCALE NTS
SHEET 1 OF 1
REV F