Chipsmall Limited consists of a professional team with an average of over 10 year of expertise in the distribution of electronic components. Based in Hongkong, we have already established firm and mutual-benefit business relationships with customers from,Europe,America and south Asia,supplying obsolete and hard-to-find components to meet their specific needs.

With the principle of “Quality Parts,Customers Priority,Honest Operation,and Considerate Service”,our business mainly focus on the distribution of electronic components. Line cards we deal with include Microchip,ALPS,ROHM,Xilinx,Pulse,ON,Everlight and Freescale. Main products comprise IC,Modules,Potentiometer,IC Socket,Relay,Connector.Our parts cover such applications as commercial,industrial, and automotives areas.

We are looking forward to setting up business relationship with you and hope to provide you with the best service and solution. Let us make a better world for our industry!

Contact us

Tel: +86-755-8981 8866 Fax: +86-755-8427 6832
Email & Skype: info@chipsmall.com Web: www.chipsmall.com
Address: A1208, Overseas Decoration Building, #122 Zhenhua RD., Futian, Shenzhen, China

THIS DRAWING IS UNPUBLISHED. RELEASED FOR PUBLICATION -,- .
© COPYRIGHT - By - ALL RIGHTS RESERVED.

LOC	DIST
AD	47

REVISIONS

P	LTR	DESCRIPTION	DATE	DWN	APVD
	AE1	REVISED PER ECO-12-007590	19JUL12	KH	MH

1. HOUSING: LIQUID CRYSTAL POLYMER, COLOR BLACK. CONTACTS: HIGH RELIABILITY COPPER ALLOY. GROUND BUSSES: BRASS,UNS C26000
2. CONTACTS & GROUND BUSES: NICKEL UNDERPLATE ALL OVER, MATING SURFACE PLATED TO MEET LEVEL 1 PERFORMANCE REQUIREMENTS OF TE PRODUCT SPECIFICATION 108-1422, SOLDER TAILS PLATED TIN-LEAD.
3. DATE CODE MARKED IN AREA INDICATED ON OPPOSITE SIDE OF POSITION #1.
4. ONE GROUND BUS WITH 5 TAILS PER EACH MODULE.
5. TOLERANCE NON-ACCUMULATIVE.
6. FOR STANDARD APPLICATIONS, ORIENTATION HOLE TO BE ø.094±.002[2.39±0.05]. FOR SLIP-FIT APPLICATIONS, ORIENTATION HOLE TO BE ø.079±.001[2.00±0.03].

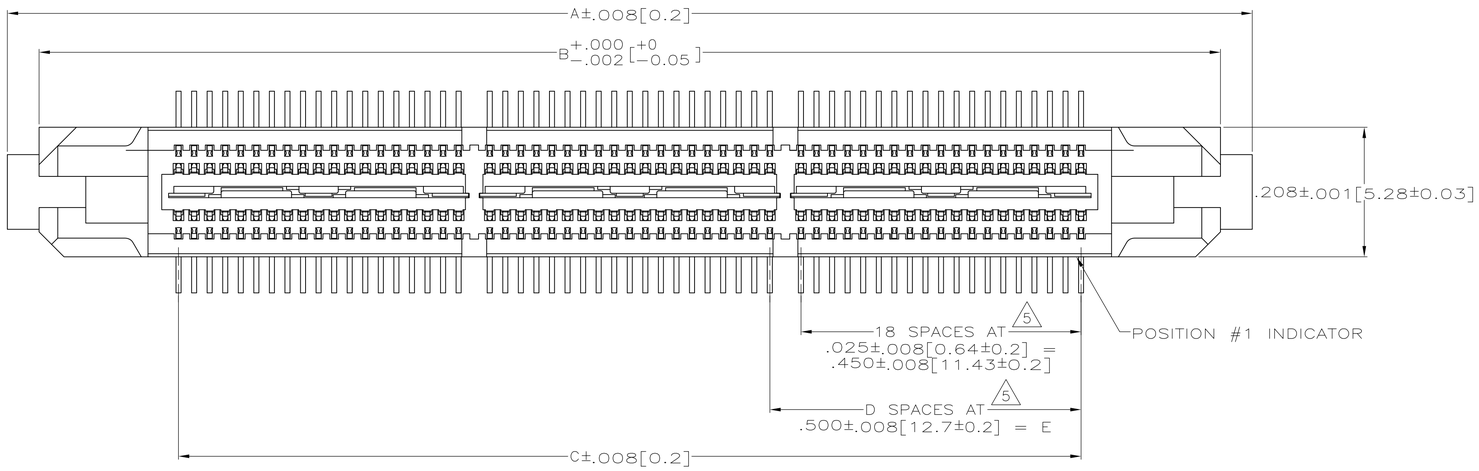

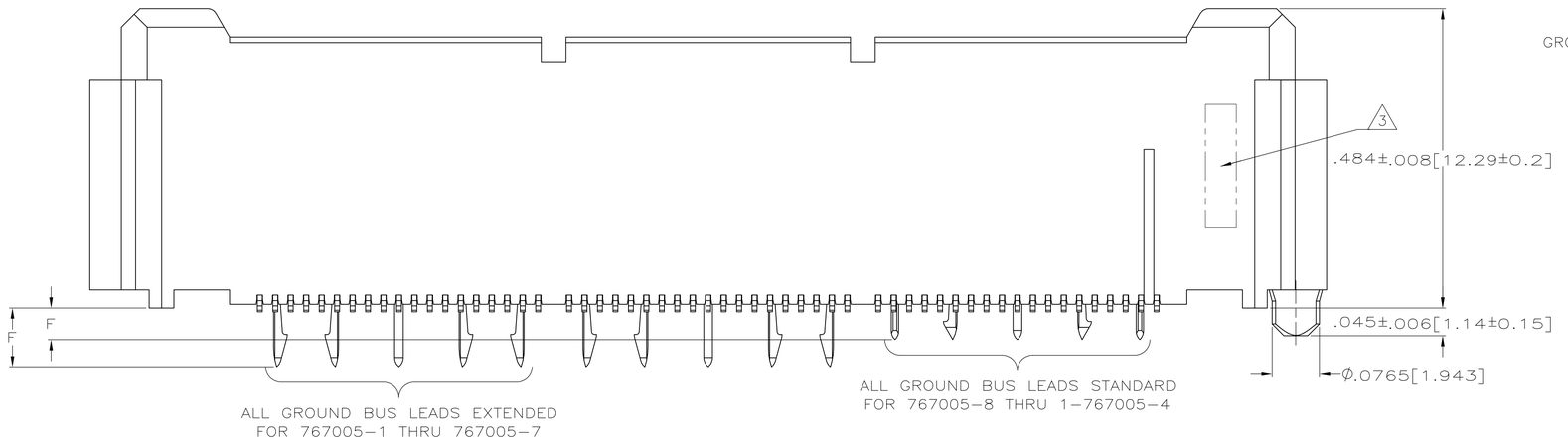

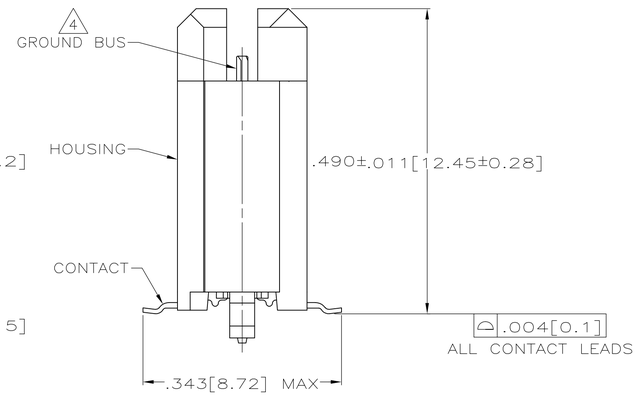

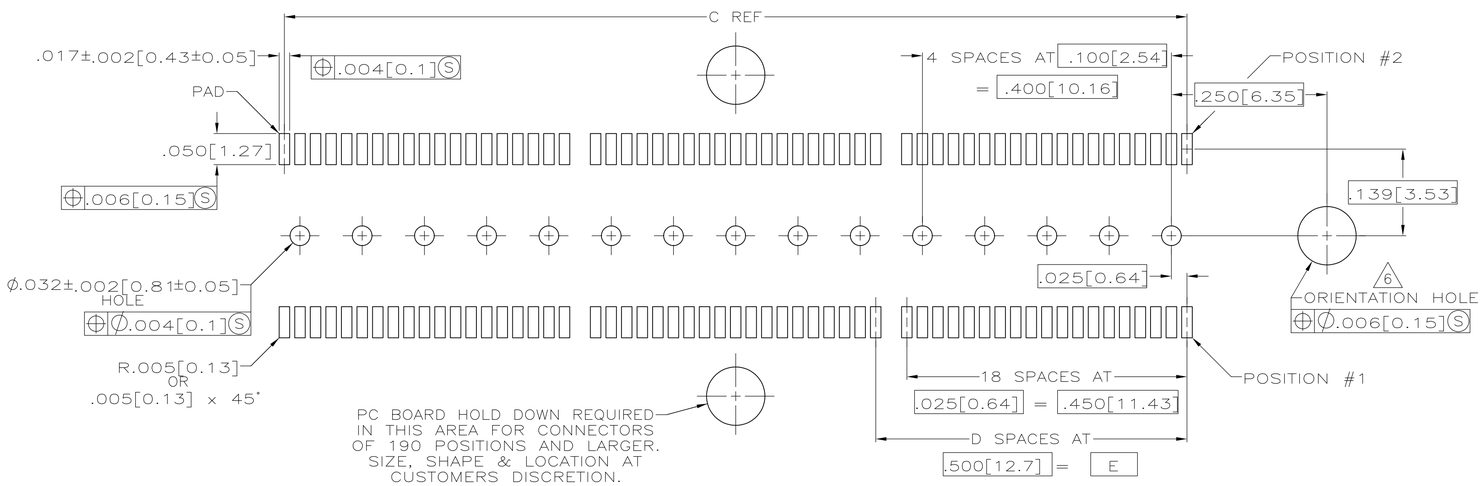

RECOMMENDED PC BOARD LAYOUT
(VIEWED FROM CONNECTOR SIDE)

	BUS LEADS TYPE	F	E	D	C	B	A	NO OF POS	PART NUMBER
	STANDARD	.060[1.52]	3.000[76.2]	6	3.450[87.63]	3.898[99]	4.000[101.6]	266	1-767005-4
	STANDARD	.060[1.52]	2.500[63.5]	5	2.950[74.93]	3.398[86.31]	3.500[88.9]	228	1-767005-3
	STANDARD	.060[1.52]	2.000[50.8]	4	2.450[62.23]	2.898[73.61]	3.000[76.2]	190	1-767005-2
	STANDARD	.060[1.52]	1.500[38.1]	3	1.950[49.53]	2.398[60.91]	2.500[63.5]	152	1-767005-1
	STANDARD	.060[1.52]	1.000[25.4]	2	1.450[36.83]	1.898[48.21]	2.000[50.8]	114	1-767005-0
	STANDARD	.060[1.52]	.500[12.7]	1	.950[24.13]	1.398[35.51]	1.500[38.1]	76	767005-9
	STANDARD	.060[1.52]	.000[0]	0	.450[11.43]	.898[22.81]	1.000[25.4]	38	767005-8
OBSOLETE	EXTENDED	.104[2.64]	3.000[76.2]	6	3.450[87.63]	3.898[99]	4.000[101.6]	266	767005-7
OBSOLETE	EXTENDED	.104[2.64]	2.500[63.5]	5	2.950[74.93]	3.398[86.31]	3.500[88.9]	228	767005-6
OBSOLETE	EXTENDED	.104[2.64]	2.000[50.8]	4	2.450[62.23]	2.898[73.61]	3.000[76.2]	190	767005-5
OBSOLETE	EXTENDED	.104[2.64]	1.500[38.1]	3	1.950[49.53]	2.398[60.91]	2.500[63.5]	152	767005-4
OBSOLETE	EXTENDED	.104[2.64]	1.000[25.4]	2	1.450[36.83]	1.898[48.21]	2.000[50.8]	114	767005-3
OBSOLETE	EXTENDED	.104[2.64]	.500[12.7]	1	.950[24.13]	1.398[35.51]	1.500[38.1]	76	767005-2
OBSOLETE	EXTENDED	.104[2.64]	.000[0]	0	.450[11.43]	.898[22.81]	1.000[25.4]	38	767005-1

THIS DRAWING IS A CONTROLLED DOCUMENT.

DIMENSIONS: INCHES

TOLERANCES UNLESS OTHERWISE SPECIFIED:
0 PLC ± -
1 PLC ± -
2 PLC ± -
3 PLC ± .005[0.13]
4 PLC ± -
ANGLES ± -

MATERIAL 1 | FINISH 2

DWN J.GERACE 8-30-96
CHK P.MATAR 8-30-96
APVD A.MONK 8-30-96

PRODUCT SPEC 108-1422
APPLICATION SPEC 114-11004
WEIGHT -

TE Connectivity

NAME PLUG ASSEMBLY, .495[12.57] VERTICAL, .025[0.64]CL, GULL WING LEADS, MICTOR -

SIZE A1 | CAGE CODE 00779 | DRAWING NO C-767005 | RESTRICTED TO -

CUSTOMER DRAWING | SCALE 8:1 | SHEET 1 OF 1 | REV AE1

4805 (3/11)