Chipsmall Limited consists of a professional team with an average of over 10 year of expertise in the distribution of electronic components. Based in Hongkong, we have already established firm and mutual-benefit business relationships with customers from,Europe,America and south Asia,supplying obsolete and hard-to-find components to meet their specific needs.

With the principle of “Quality Parts,Customers Priority,Honest Operation,and Considerate Service”,our business mainly focus on the distribution of electronic components. Line cards we deal with include Microchip,ALPS,ROHM,Xilinx,Pulse,ON,Everlight and Freescale. Main products comprise IC,Modules,Potentiometer,IC Socket,Relay,Connector.Our parts cover such applications as commercial,industrial, and automotives areas.

We are looking forward to setting up business relationship with you and hope to provide you with the best service and solution. Let us make a better world for our industry!

Contact us

Tel: +86-755-8981 8866 Fax: +86-755-8427 6832
Email & Skype: info@chipsmall.com Web: www.chipsmall.com
Address: A1208, Overseas Decoration Building, #122 Zhenhua RD., Futian, Shenzhen, China

THIS DRAWING IS UNPUBLISHED. RELEASED FOR PUBLICATION -,- .
© COPYRIGHT - BY TYCO ELECTRONICS CORPORATION. ALL RIGHTS RESERVED.

LOC	DIST
AD	00

REVISIONS

P	LTR	DESCRIPTION	DATE	DWN	APVD
	L1	REV PER ECO-09-021826	09SEP09	KK	AEG

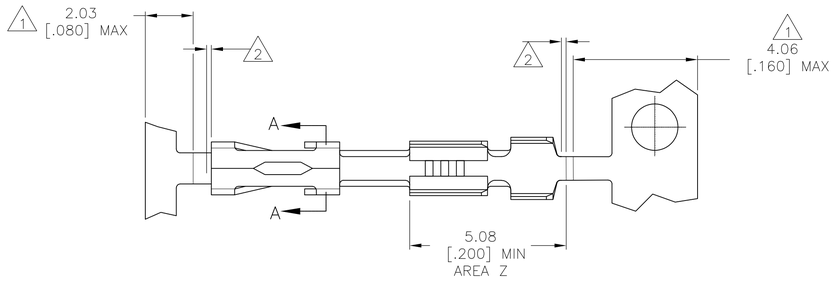

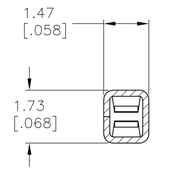

SECTION A—A

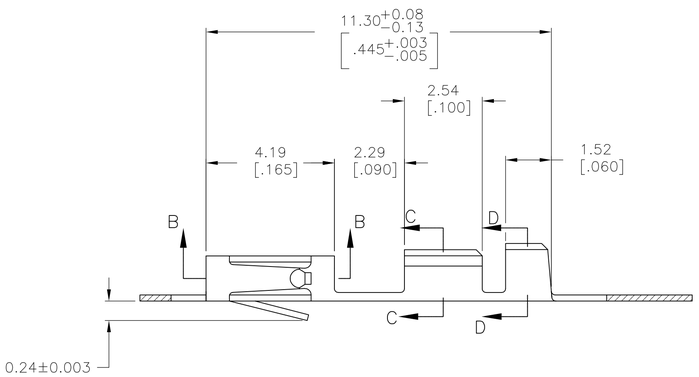

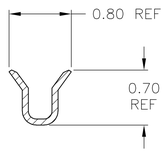

WIRE SIZE: #26–#30
SECTION C—C

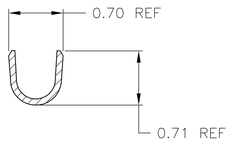

INSULATION RANGE: .048 MAX
SECTION D—D

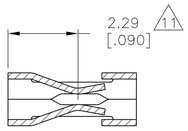

SECTION B—B

1. GOLD PLATING NOT REQUIRED IN THIS AREA.
2. .006 MAX LOOSE PIECE CUT OFF.
3. .000050–.000150 PREPLATED BRIGHT TIN.
4. .000030 GOLD IN CONTACT AREA, GOLD FLASH ON THE REMAINDER, OVER .000050 NICKEL.
5. .000030 GOLD OVER .000050 NICKEL, ENTIRE CONTACT.
6. .000050 GOLD OVER .000050 NICKEL, ENTIRE CONTACT.
7. .000015 GOLD IN CONTACT AREA, GOLD FLASH ON THE REMAINDER, OVER .000050 NICKEL.
8. .000015 GOLD IN CONTACT AREA, .000100 – .000200 BRIGHT TIN–LEAD IN AREA Z, ALL OVER .000050 NICKEL.
9. .000030 GOLD IN CONTACT AREA, .000100 – .000200 BRIGHT TIN–LEAD IN AREA Z, ALL OVER .000050 NICKEL.
10. SHEARED EDGES PERMITTED TO BE UNPLATED.
11. POINT OF MEASUREMENT FOR PLATING THICKNESS (INSIDE BEAMS).
12. OBSOLETED PART NUMBERS.
13. OBSOLETE PARTS: OBSOLETE CIS STREAMLINING PER D.RENAUD/D.SINISI

	TYPE	FINISH	PART NUMBER
OBSOLETE	LOOSE PC	9 10	2–87313–1
OBSOLETE	MINI APPL	9 10	2–87313–0
OBSOLETE	LOOSE PC	8 10	1–87313–9
OBSOLETE	MINI APPL	8 10	1–87313–8
OBSOLETE	LOOSE PC	1 7	1–87313–7
OBSOLETE	LOOSE PC	1 6	1–87313–6
OBSOLETE	LOOSE PC	1 5	1–87313–5
	LOOSE PC	1 4	1–87313–4
OBSOLETE	LOOSE PC	3	1–87313–3
OBSOLETE	MINI APPL	1 7	1–87313–2
OBSOLETE	MINI APPL	1 6	1–87313–1
OBSOLETE	MINI APPL	1 5	1–87313–0
	MINI APPL	1 4	87313–9
13 OBSOLETE	MINI APPL	3	87313–8
OBSOLETE	STD APPL	–	87313–7
OBSOLETE	STD APPL	1 7	87313–6
OBSOLETE	STD APPL	1 6	87313–5
OBSOLETE	STD APPL	1 5	87313–4
OBSOLETE	STD APPL	1 4	87313–3
OBSOLETE	STD APPL	3	87313–2
	IN PROCESS	–	87313–1

THIS DRAWING IS A CONTROLLED DOCUMENT.

DIMENSIONS: mm [INCHES]

TOLERANCES UNLESS OTHERWISE SPECIFIED:
0 PLC ± –
1 PLC ± –
2 PLC ± –
3 PLC ± .13 [.005]
4 PLC ± –
ANGLES ± –

MATERIAL: PHOS BRONZE .008 THK.
FINISH: SEE TABLE

DWN J.HERRINGTON 09DEC96
CHK J.HERRINGTON 09DEC96
APVD J.HERRINGTON 09DEC96
PRODUCT SPEC 108–25007
APPLICATION SPEC 114–25003
WEIGHT –

Tyco Electronics
Tyco Electronics Corporation
Harrisburg, PA 17105–3608

NAME: CONTACT, MOD V, RECEPTACLE, CRIMP SNAP–IN

SIZE A1 | CAGE CODE 00779 | DRAWING NO C–87313 | RESTRICTED TO –

CUSTOMER DRAWING | SCALE NTS | SHEET 1 OF 1 | REV L1