Chipsmall Limited consists of a professional team with an average of over 10 year of expertise in the distribution of electronic components. Based in Hongkong, we have already established firm and mutual-benefit business relationships with customers from,Europe,America and south Asia,supplying obsolete and hard-to-find components to meet their specific needs.

With the principle of “Quality Parts,Customers Priority,Honest Operation,and Considerate Service”,our business mainly focus on the distribution of electronic components. Line cards we deal with include Microchip,ALPS,ROHM,Xilinx,Pulse,ON,Everlight and Freescale. Main products comprise IC,Modules,Potentiometer,IC Socket,Relay,Connector.Our parts cover such applications as commercial,industrial, and automotives areas.

We are looking forward to setting up business relationship with you and hope to provide you with the best service and solution. Let us make a better world for our industry!

Contact us

Tel: +86-755-8981 8866 Fax: +86-755-8427 6832
Email & Skype: info@chipsmall.com Web: www.chipsmall.com
Address: A1208, Overseas Decoration Building, #122 Zhenhua RD., Futian, Shenzhen, China

THIS DRAWING IS UNPUBLISHED.
VERÖFFENTLICHTE UNVERÖFFENTLICHTE ZEICHNUNG
© COPYRIGHT 2003 BY AMP INCORPORATED.
RELEASED FOR PUBLICATION ,2003.
FREI FÜR VERÖFFENTLICHUNG
ALL RIGHTS RESERVED.
ALLE RECHTE VORBEHALTEN.

MATED WITH:
PASSEND ZU:
962352/963287

LOC	DIST
AI	–

PROJECT NR.: 89-52112

REVISIONS / ÄNDERUNGEN

P	LTR	DESCRIPTION / BESCHREIBUNG	DATE	DWN	APVD
	D	SEE PCN EG00-0195-03	29JAN03	H.M.	T.K.

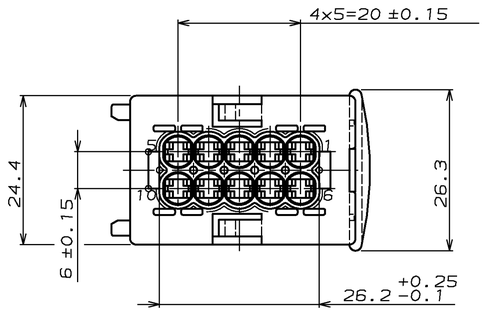

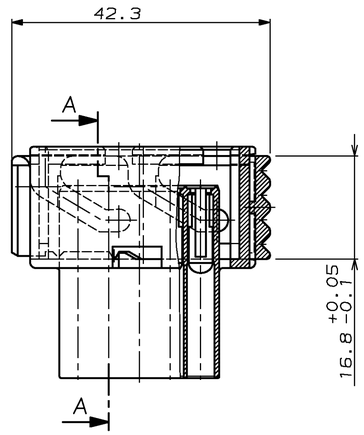

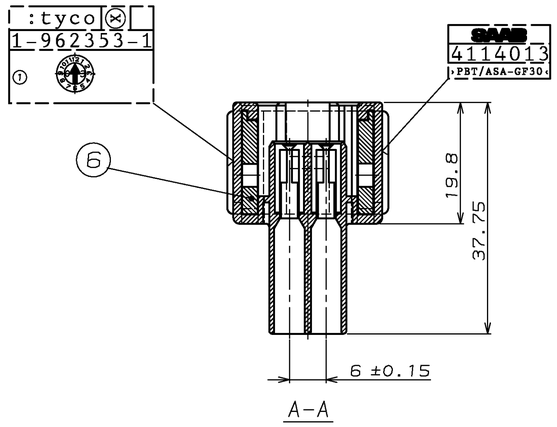

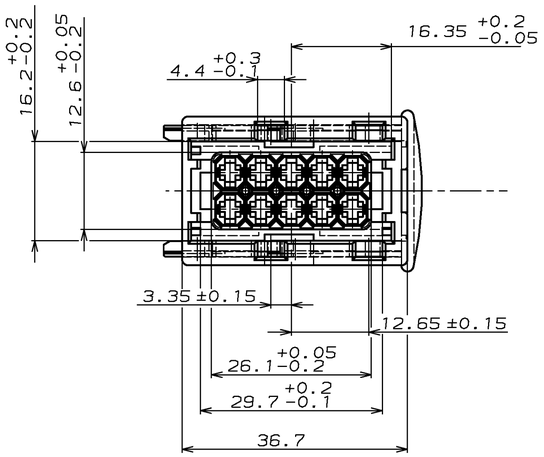

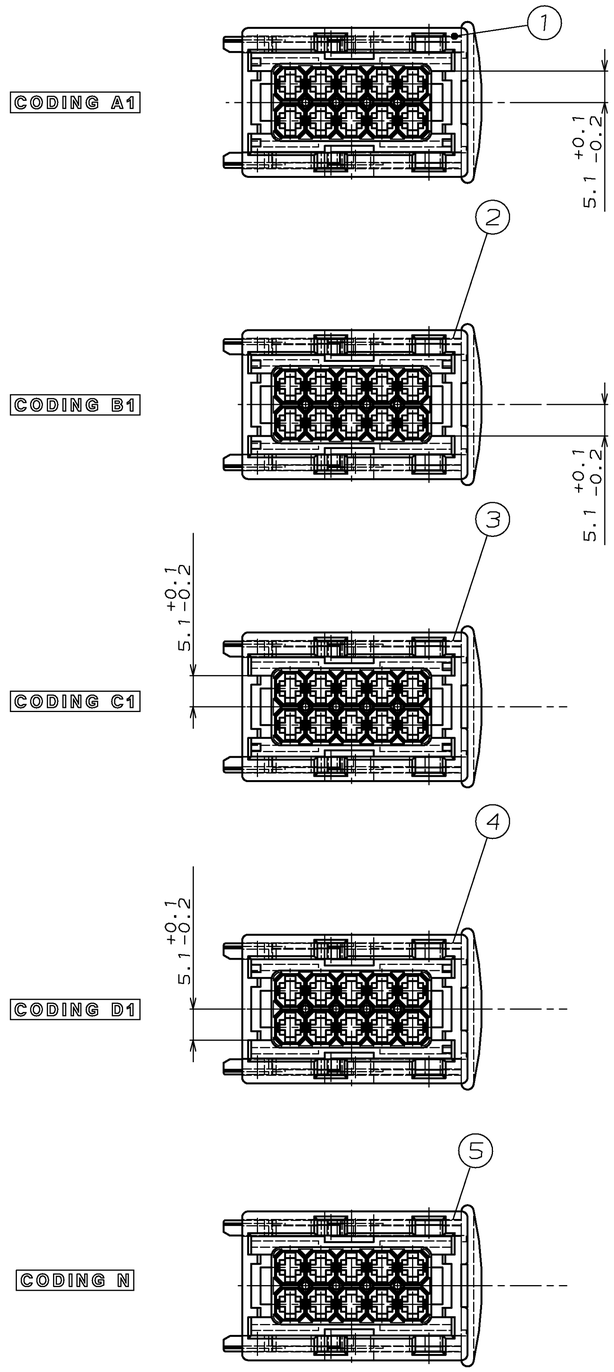

SAAB PART NO	AMP PART NO	REV.	PCS.	MATERIAL	SURFACE / COLOR	DESCRIPTION	ITEM NO
4114005	5-963214-1 CODING N	D	1	PBT-GF30	RED	SLIDE	6
			1	PBT/ASA-GF30	WHITE	JPT HOUSING, 10POS.	5
4114047	4-963214-1 CODING D1	D	1	PBT-GF30	RED	SLIDE	6
			1	PBT/ASA-GF30	BROWN	JPT HOUSING, 10POS.	4
4114039	3-963214-1 CODING C1	D	1	PBT-GF30	RED	SLIDE	6
			1	PBT/ASA-GF30	BLUE	JPT HOUSING, 10POS.	3
4114021	2-963214-1 CODING B1	D	1	PBT-GF30	RED	SLIDE	6
			1	PBT/ASA-GF30	GREY	JPT HOUSING, 10POS.	2
4114013	1-963214-1 CODING A1	D	1	PBT-GF30	RED	SLIDE	6
			1	PBT/ASA-GF30	BLACK	JPT HOUSING, 10POS.	1

THIS DRAWING IS A CONTROLLED DOCUMENT FOR AMP INCORPORATED. IT IS SUBJECT TO CHANGE AND THE CONTROLLING DOCUMENTATION DESIGNATED SHALL BE CONTACTED FOR THE LATEST REVISION.
DIESES ZEICHNUNGSDOKUMENT, EIGN DURCH AMP INCORPORATED KONTROLLIERT, ABGEÄNDERT, DIE DEN TECHNISCHEN FORTSCHRITT DIENEN, SIND VORBEHALTEN. DEN JÜNGSTE LEITFÄHLTIGEN ÄNDERUNGSSTAND ERFRAGEN SIE AMP INPRAMC.

DIMENSIONS: MM
DIMENSIONEN: MM

TOLERANCES UNLESS OTHERWISE SPECIFIED:
ALLGEMEINTOLERANZEN

n.	ISO 8015
n.	ISO 2768 m-E
A	DIN 16901 - IT 10
0 PLCS	±0.3mm
1 PLCS	±0.3mm
2 PLCS	±0.3mm
3 PLCS	±-
ANGLES/WINKEL	±1°
FINISH/OBERFLAECHE/FARBE	-

MATERIAL: -

DWN	S.Garcia	29.03.93
CHK	W.Stabroth	29.03.93
APVD	-	
PRODUCT SPEC PRODUKTSPEZ.	108-18102	
APPLICATION SPEC VERARBEITUNGSSPEZ.	114-18175	
WEIGHT GEWICHT	-	

AMP — tyco Electronics AMP GmbH, D - 64625 Bensheim

NAME: JPT HOUSING, 10POS.
JPT Gehäuse, 10polig

SIZE	CAGE CODE	DRAWING NO ZEICHNUNGS-NR.	RESTRICTED TO NUR FÜER
A1	00779	C-963214	—

CUSTOMER DRAWING /KUNDENZEICHNUNG — MASSSTAB 2:1 — BLATT 1 OF 1 VON 1 — REV D

AMP 4805 REV 27JUN96

01-APR-03 11:07:39 eg004451 s.963214.l.c (in EDM)