Chipsmall Limited consists of a professional team with an average of over 10 year of expertise in the distribution of electronic components. Based in Hongkong, we have already established firm and mutual-benefit business relationships with customers from,Europe,America and south Asia,supplying obsolete and hard-to-find components to meet their specific needs.

With the principle of “Quality Parts,Customers Priority,Honest Operation,and Considerate Service”,our business mainly focus on the distribution of electronic components. Line cards we deal with include Microchip,ALPS,ROHM,Xilinx,Pulse,ON,Everlight and Freescale. Main products comprise IC,Modules,Potentiometer,IC Socket,Relay,Connector.Our parts cover such applications as commercial,industrial, and automotives areas.

We are looking forward to setting up business relationship with you and hope to provide you with the best service and solution. Let us make a better world for our industry!

# Contact us

Tel: +86-755-8981 8866 Fax: +86-755-8427 6832
Email & Skype: info@chipsmall.com Web: www.chipsmall.com
Address: A1208, Overseas Decoration Building, #122 Zhenhua RD., Futian, Shenzhen, China

THIS DRAWING IS UNPUBLISHED.
VERTRAULICHE UNVEROEFFENTLICHTE ZEICHNUNG
© COPYRIGHT 1996

RELEASED FOR PUBLICATION
FREI FUER VEROEFFENTLICHUNG
ALL RIGHTS RESERVED.
ALLE RECHTE VORBEHALTEN.

MATED WITH:
PASSEND ZU:

# Anschlussbereich fuer Wellrohradapter
# CONNECTING AREA FOR CORRUGATED TUBE ADAPTER

| LOC | DIST |
|---|---|
| A1 | - |

PROJEKT NR.: 95-52420

REVISIONS
ANDERUNGEN

| P | LTR | DESCRIPTION / BESCREIBUNG | DATE | DWN | APVD |
|---|---|---|---|---|---|
| | F5 | see ECR-11-015403 | 25JUL2011 | VP | HS |
| | F6 | see ECR-14-004995 | 03APR2014 | VP | HS |
| | F7 | ECR-14-008519 | 10JUN2014 | KK | ZP |
| | F8 | ECR-15-011999 | 12AUG2015 | Ho. | Gilch |

SECTION C-C

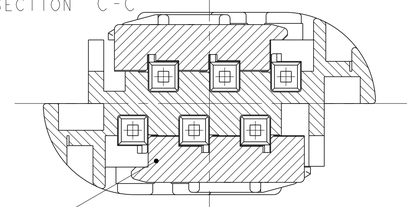

LIEFERZUSTAND
2. Kontaktsicherung in Vorrastellung
CONDITION ON DELIVERY
RETAINER IN PRELOCKED POSITION

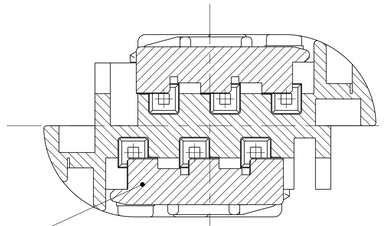

2. Kontaktsicherung in Endrastellung
RETAINER IN ENDLOCKED POSITION

Verschiebeweg / DISPLACE 2 x 1.6 mm

BLACK/ schwarz
5-967616-2

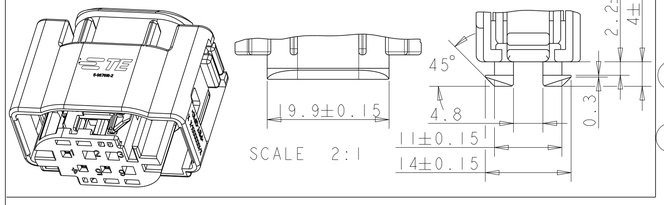


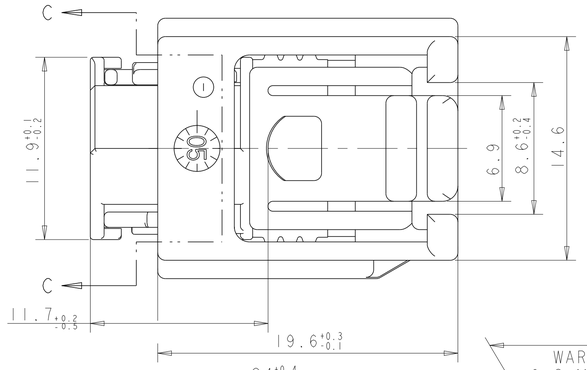


SECTION A-A

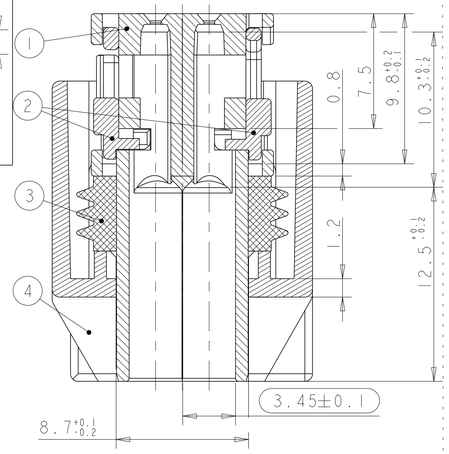


LIEFERZUSTAND
2. Kontaktsicherung in Vorrastellung
CONDITION ON DELIVERY
RETAINER IN PRELOCKED POSITION

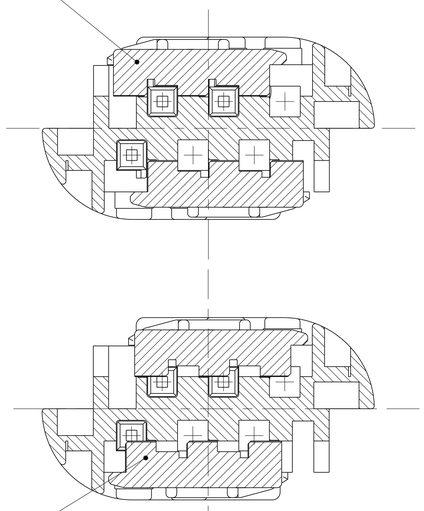

2. Kontaktsicherung in Endrastellung
RETAINER IN ENDLOCKED POSITION

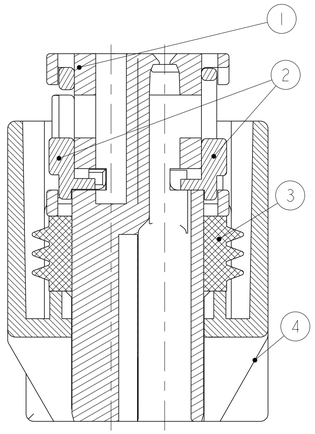

Durchsteckloch min Ø 33mm
INSERTION OPENING....

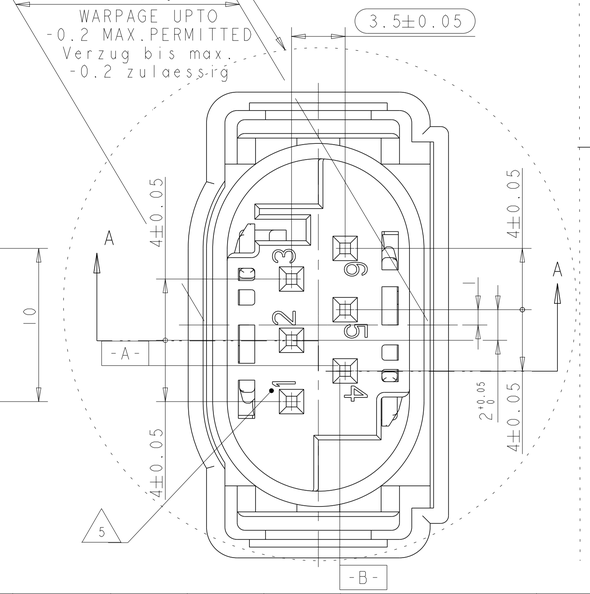


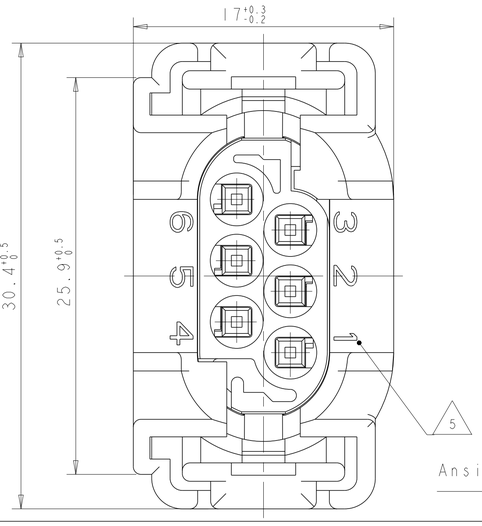


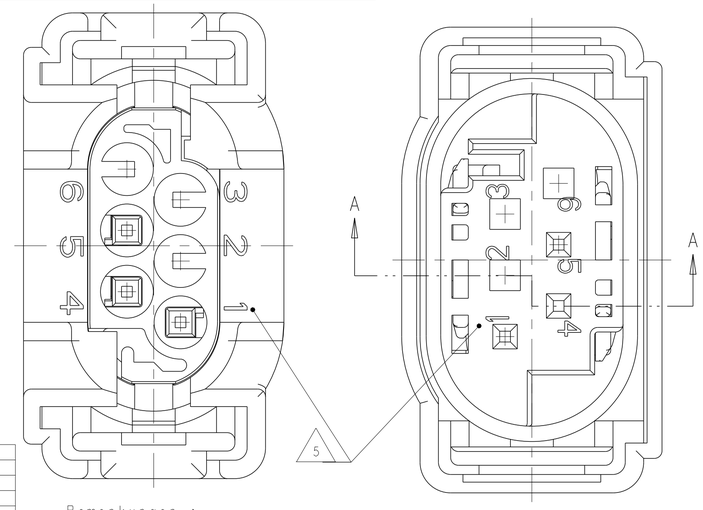


Ansicht X
VIEW X

Materialentnahme
im Kodierbereich
zulaessig

MATERIAL RECESS
PERMITTED

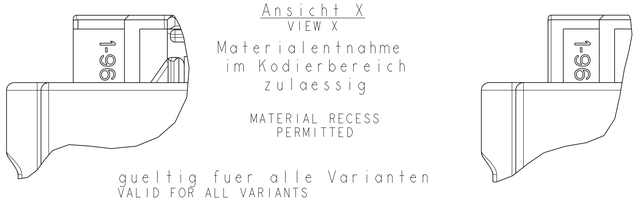

gueltig fuer alle Varianten
VALID FOR ALL VARIANTS

1 - - 1
WIE GEZEICHNET
AS SHOWN

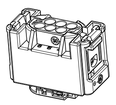

KODIERUNGEN / CODINGS
2:1

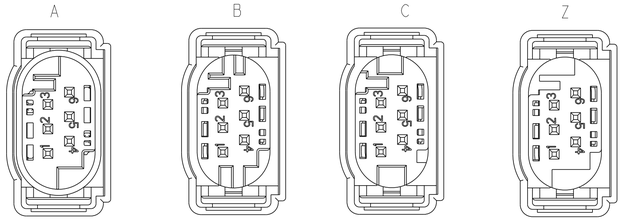


1:1

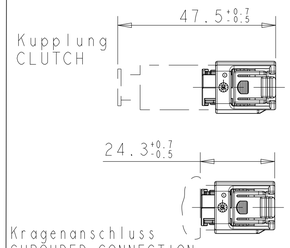


| CODING | BESTELL-NR. | REV. | POS. | STÜCK | BENENNUNG EINZEL TEIL | WERKSTOFF | OBERFLÄCHE / FARBE |
|---|---|---|---|---|---|---|---|
| B | 5-967616-2 | A | 4 | 1 | Schutzkappe | PBT-GF 10 | schwarz |
| | | | 3 | 1 | Dichtung | MQV30 | natur |
| | | | 2 | 2 | 2. Kontaktsicherung | PBT-GF 15 | grün |
| | | | 1 | 1 | Buchsengehäuse | PBT-GF 15 | grau |
| B | 4-967616-2 | A | 4 | 1 | Schutzkappe | PBT-GF 15 | schwarz |
| | | | 3 | 1 | Dichtung | MQV30 | natur |
| | | | 2 | 2 | 2. Kontaktsicherung | PBT-GF 15 | grün |
| | | | 1 | 1 | Buchsengehäuse | PBT-GF 15 | grau |
| B | 7-967616-3 | A | 4 | 1 | Schutzkappe | PBT-GF 15 | gelb/YELLOW |
| | | | 3 | 1 | Dichtung | MQV30 | natur/NATURAL |
| | | | 2 | 2 | 2. Kontaktsicherung | PBT-GF 15 | gruen/GREEN |
| | | | 1 | 1 | Buchsengehäuse | PBT-GF 15 | grau/GREY |
| Z | 9-967616-1 | | 4 | 1 | Schutzkappe | PBT-GF 15 | schwarz |
| | | | 3 | 1 | Dichtung | MQV30 | natur |
| | | | 2 | 2 | 2. Kontaktsicherung | PBT-GF 15 | grün |
| | | | 1 | 1 | Buchsengehäuse | PBT-GF 15 | wasser blau |
| C | 3-967616-1 | A | 4 | 1 | Schutzkappe | PBT-GF 15 | schwarz |
| | | | 3 | 1 | Dichtung | MQV30 | natur |
| | | | 2 | 2 | 2. Kontaktsicherung | PBT-GF 15 | grün |
| | | | 1 | 1 | Buchsengehäuse | PBT-GF 15 | blau |
| B | 2-967616-1 | F | 4 | 1 | Schutzkappe | PBT-GF 15 | schwarz |
| | | | 3 | 1 | Dichtung | MQV30 | natur |
| | | | 2 | 2 | 2. Kontaktsicherung | PBT-GF 15 | grün |
| | | | 1 | 1 | Buchsengehäuse | PBT-GF 15 | grau |
| A | 1-967616-2 | F | 4 | 1 | Schutzkappe | PBT-GF 15 | schwarz |
| | | | 3 | 1 | Dichtung | MQV30 | natur |
| | | | 2 | 2 | 2. Kontaktsicherung | PBT-GF 15 | grün |
| | | | 1 | 1 | Buchsengehäuse | PBT-GF 15 | schwarz |
| A | 1-967616-1 | F | 4 | 1 | Schutzkappe | PBT-GF 15 | schwarz |
| | | | 3 | 1 | Dichtung | MQV30 | natur |
| | | | 2 | 2 | 2. Kontaktsicherung | PBT-GF 15 | grün |
| | | | 1 | 1 | Buchsengehäuse | PBT-GF 15 | schwarz |

Bemerkungen :
NOTES:

1. Massgebend ist der deutsche Text
   ONLY GERMAN LANGUAGE VERSION SHALL BE AUTHORITATIVE
2. Possend zu Buchsenkontact for Einzelleiterabdichtung:
   SUITABLE FOR SOCKET CONTACT FOR SINGLE WIRE SEALING
   TE 962885 ( DGB 0.2-0.5 mm2 ), 965906 ( DGB 0.75 mm2)
   TE .....
3. Kragenanschluss siehe Zeichnung:
   SHROUDED CONNECTION SEE DRAWING:
   TE. 114-18063-126
   TE.....
4. Passend fuer Leitungsquerschnitt:
   SUITABLE FOR WIRE SIZE RANGE:
   TO.....
5. Zahlenausrichtung freigestellt
   DIRECTION OF FIGURES OPTIONAL

1 - ... - 2 WIE GEZEICHNET
AS SHOWN

THIS DRAWING IS A CONTROLLED DOCUMENT.
DIESES ZEICHNUNGSDOKUMENT WIRD DURCH AMP INCORPORATED KONTROLLIERT.
ÄNDERUNGEN, DIE DEM TECHNISCHEN FORTSCHRITT DIENEN, SIND VORBEHALTEN.
DER JEWEILS GÜLTIGEN ÄNDERUNGSSTAND ERFAHREN SIE AUF ANFRAGE.

DIMENSIONS: mm
MASSEINHEITEN:

TOLERANCES UNLESS OTHERWISE SPECIFIED:
ALLGEMEINTOLERANZEN

| | | |
|---|---|---|
| 0 PLC | ±- | ISO 2768 - mK -E |
| 1 PLC | ±- | DIN 16901-14B |
| 2 PLC | ±- | |
| 3 PLC | ±- | |
| 4 PLC | ±- | |
| ANGLES/WINKEL | ±- | |

MATERIAL - -
FINISH/OBERFLACHE/FARBE -

| | | |
|---|---|---|
| DWN | M Trajkov | 29-JUL-96 |
| CHK | M. Schwaeger | 29-JUL-96 |
| APVD | - | |

PRODUCT SPEC
PRODUKTSPEZ.
108-18272-0

APPLICATION SPEC
VERARBEITUNGSSPEZ.
114-18061

WEIGHT / GEWICHT -

TE Connectivity

NAME
MOS SOCKET HOUSING SWS,6 POS, ASSY
MOS Buchsengehaeuse,EDS,6pol.kompl.
-

| SIZE | CAGE CODE | DRAWING NO / ZEICHNUNGS-NR. | RESTRICTED TO / NUR FUER |
|---|---|---|---|
| A1 | 00779 | C-967616 | - |

Customer Drawing /KUNDENZEICHNUNG

| SCALE / MASSSTAB | SHEET / BLATT | OF / VON | REV |
|---|---|---|---|
| 5:1 | 1 | 1 | F8 |

4805 (3/11)